INNOVA by etex

December 2025

Floor Loading Solutions

Durafloor® and Compressed Flooring

Technical Supplement

Australia

Disclaimer

Innova products and systems designed by Etex Australia Pty Ltd are produced in accordance with both the New Zealand Building Code and Building Code of Australia and relevant Australian and New Zealand Standards at the time of publication. Information in this document is to be used as a guide and is subject to project approval as many aspects of construction are not comprehensively covered. It is the responsibility of the designer to confirm Innova products and systems are suitable and meet the requirements for the intended application.

Etex Australia Pty Ltd will not be held responsible for any claims resulting from installation not in accordance with the manufacturer's technical literature or relevant Standards.

Non-compliance with this Technical Supplement, the Durafloor® Design and Installation Guide, the Compressed Flooring Design and Installation Guide, applicable building codes, regulations, and Australian/New Zealand Standards may lead to personal injury, diminished product performance, and voided warranties.

Innova regularly updates technical literature; to ensure this document is current with the latest information, visit innovafibrecement.com.au

Warranty

Durafloor® and Compressed Flooring is warranted for a period of 25 years.

Visit innovafibrecement.com.au for the latest warranty information.

About Innova

Innova is a commercial brand of Etex, a global building material manufacturer and pioneer in lightweight construction. Etex wants to inspire people around the world to build living spaces that are ever more safe, sustainable, smart, and beautiful. Founded in 1905 in Belgium, Etex are a family-owned company with more than 13,500 employees across 160 sites and 45 countries.

Innova are the fibre cement specialists, and distribute external cladding systems, interior lining and flooring substrate products specifically designed for the residential and commercial markets in Australia and New Zealand

With a deep understanding of the local market needs, the Innova range of fibre cement products provide architects, designers, builders and homeowners with a range of traditional and contemporary solutions to create spaces that work for their project.

Innova are constantly looking for ways to evolve and innovate their product offering, adapting to changes in the market.

Innova - built on change, backed by Etex.

1. Working Safely

1.1 Working Safely with Innova Fibre Cement

WARNING: P2 OR HIGHER-GRADE RESPIRATOR MUST BE WORN AND PRODUCT CUT OUTDOORS.

Innova fibre cement is manufactured from finely ground sand (silica), cellulose fibers, Portland cement and additives. In the product's manufactured state, it does not release airborne dust. Inhalation of Respirable Crystalline Silica (RCS) is hazardous and can cause damage to lungs, respiratory system, and cancer when users are exposed to dust over prolonged periods without adequate controls in place.

The risks associated with RCS inhalation arise during installation activities where mechanical methods are used for cutting, rebating, drilling, routing, crushing, sanding and cleaning up, disposing of, or relocating dust.

Before, during and after installation, it is important to be aware of activities that generate and lead to dust becoming airborne. Innova recommends following the Innova Working Safely Guidelines listed below in addition to site-specific safety procedures, Safe Work Australia guidelines and state or territory guidelines.

USERS ARE RESPONSIBLE FOR ADHERING TO GUIDELINES, RECOMMENDATIONS, SAFETY DATA SHEETS, INSTALLATION GUIDES, FEDERAL AND LOCAL REGULATIONS TO AVOID SERIOUS HEALTH IMPACTS.

Control the risks by utilising engineering controls (i.e. tools/equipment), administrative controls (i.e. workspace/safe work method statement) and correct PPE (i.e. respirator/eye wear).

1.2 Innova Working Safely Guidelines

Documentation

Read the current Safety Data Sheet and Working Safely documents available at innovafibrecement.com.au

ALWAYS wear a properly fitted P2 or higher-grade respirator when cutting, drilling, rebating, sanding.

ALWAYS alternate cutting activities with others to reduce exposure time.

AVOID using power tools to cut or shape fibre cement products indoors.

NEVER use a saw blade that is not designed to cut fibre cement.

ALWAYS use on-tool dust extraction when using power tools; M or H-Class vacuum fitted with a HEPA filter.

ALWAYS follow the tool manufacturer's guidelines for correct and safe operation.

DO NOT dry sweep. Use wet suppression then sweep or H or M-Class vacuum.

DO NOT continue activities if you are concerned about exposure levels or cannot comply with the above guidelines.

Power Saw

Circular, compound mitre and track saws with dust extraction provide accurate and clean cuts. Ensure saw is fitted with a PCD 4 or 6 tooth fibre cement blade. Always follow the manufacturers guidelines for safe operation.

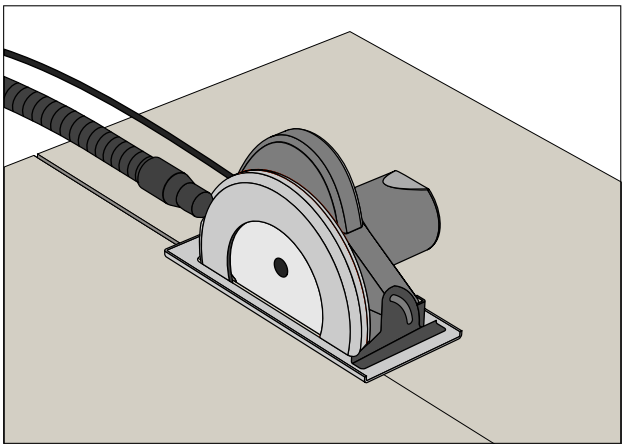

2. Product Information

2.1 Introduction

Durafloor®

Durafloor® is a structural fibre cement flooring sheet with an innovative tongue and groove joint system that eliminates the need for blocking, simplifying and increasing speed of installation. Durafloor® is engineered for dry and wet areas internally and externally on balconies, verandahs and pool surrounds.

The material properties of Durafloor® provides tangible benefits and is suitable for:

- A single product for interior and exterior flooring applications.
- Tongue and groove edge profile compatible with particleboard flooring systems.
- Easily installed using traditional gun nailing methods
- Has greater impact resistance and feels more solid underfoot.

Compressed Flooring

Compressed Flooring is a high density, compressed structural fibre cement flooring sheet also engineered for dry and wet areas internally and externally on balconies, verandahs and pool surrounds.

Manufactured to achieve high strength and durability performance, Compressed Flooring is suited for applications requiring high load capabilities.

2.2 Product Conformance

Durafloor® and Compressed Flooring is manufactured from Portland cement, finely ground silica, cellulose fibres and water. After forming, it is then cured in a high-pressure steam autoclave to create a durable, dimensionally stable product.

Durafloor® is manufactured to conform to the requirements of AS/NZS 2908.2 Cellulose Cement Products, and is classified as Type A Category 3 for exterior use.

Compressed Flooring is manufactured to conform to the requirements of AS/NZS 2908.2 Cellulose Cement Products, and is classified as Type A Category 5 for exterior use.

2.3 Engineering

This supplement must be read in conjunction with both the Durafloor® Design and Installation Guide and the Compressed Flooring Design and Installation Guide.

This technical supplement details the performance of Durafloor® and Compressed Flooring systems in relation to AS/NZS 1170.1 Structural Design Actions, Part 1: Permanent, Imposed, and Other Actions, specifically Table 3.1.

Table 3.1 of AS/NZS 1170.1 provides reference values for imposed floor loads, including uniformly distributed loads (e.g., 1.5kPa for bedrooms, 4.0kPa for theaters, or 5.0kPa for shopping areas) and concentrated loads (kN) for various occupancy types.

These values should be adjusted per Clause 3.4 to ensure accurate load specifications in construction documentation.

Tables 2, 3 and 4 in this supplement outline the maximum concentrated and uniformly distributed loads that Durafloor® and Compressed Flooring are designed to withstand, based on Table 3.1 of AS/NZS 1170.1 and specify the suitable applications for these flooring systems.

3. Structural Load Requirements

3.1 Live & Dead Loads

Live loads, as defined by AS/NZS 1170.1 Table 3.1, are temporary loads from occupancy or equipment, varying by use (e.g., 1.5kPa for domestic areas, 5kPa for public assembly).

Dead loads, per AS/NZS 1170.0, represent the permanent weight of the structure, such as 19 mm Durafloor® (~0.25kPa), typically expressed as a uniformly distributed load (UDL) due to its consistent distribution.

Live loads may be uniformly distributed loads (UDL), e.g. 3kPa from office foot traffic (Category B), or concentrated loads, e.g. a 5kN retail display (Category C), per AS/NZS 1170.1.

Durafloor® and Compressed Flooring are engineered to support both UDL and concentrated live loads, combined with dead loads, ensuring robust performance across residential, commercial, and retail applications.

3.2 Load Table Assumptions

Tables 2, 3 and 4 are based on the following assumptions:

Installation Compliance:

The flooring systems shall be installed in accordance with the Durafloor® and Compressed Flooring Design & Installation Guide, including the following requirements:

- Flooring lengths will be laid perpendicular to the joists.
- Short edges will be fully supported on joists.
- Long edges will be fully supported at stair treads or landings.
- The flooring will be dry during installation and maintained in a dry condition thereafter.
- Strength and deflection calculations include 1kPa allowance for the weight of floor coverings.
- Minimum 3 joists per flooring sheet.

Load Considerations:

The design accounts for a superimposed dead load of 1kPa, in addition to the weight of the flooring board.

Serviceability Limit:

Tables 2, 3 & 4 incorporate a serviceability deflection limit state of span/300, unless noted otherwise, based on ($G + \psi Q$) combination of actions for serviceability limit states, where G represents permanent loads and ψQ represents the factored imposed loads.

Ultimately, the designer must ensure deflection of the substrate does not exceed the capacity of the specified floor covering for their particular application.

3.3 Maximum Concentrated Actions

AS/NZS 1170.1 (Table 3.1) specifies the following reference values of concentrated floor actions:

— For residential applications, a concentrated action of 1.8kN applied to an area of 350mm^2.

— For commercial and other applications, concentrated actions of 2.7kN or above (depending on the specific application) applied to an area of 0.01m^2 (100mm x 100mm).

Table 2 specifies the maximum allowable concentrated loads for Durafloor® and Compressed Flooring, in accordance with AS/NZS 1170.1 requirements.

Note: A safety factor of 1.5 applies. At no time shall the design ultimate load exceed 1.5 x concentrated action.

Table 2: Maximum Concentrated Actions (kN)

Thickness (mm)	Joist spacing (mm)	Domestic & Residential Activities[1]	Commercial Activities[4]
Durafloor®			
19	300	2.7	2.7
	450	2.7[2]	2.7[2]
22	300	2.7	3.5
	450	2.7	3.5
	600	2.7	2.7
Compressed Flooring			
15	300	1.8	1.8
	450	1.4	1.4
18	300	2.7	3.6[3]
	450	2.7	2.7
	600	1.8	1.8
24	300	2.7	9.8
	450	2.7	6.7
	600	2.7	4.9

Notes:

1. The maximum concentrated action of 1.8kN for domestic and residential activities shall be applied over a minimum area of 350mm^2.

2. Serviceability deflection limit of Span/280 achieved. Ultimately, the designer must ensure deflection of the substrate does not exceed the capacity of the specified floor covering for their particular application.

3. Shall only be installed long edge across the joists with sheet ends on joist.

4. Commercial applications 2.7kN and over applied over a minimum area of 0.01m^2

3.4 Maximum Uniformly Distributed Actions

AS/NZS 1170.1 Table 3.1 provides reference values for uniformly distributed loads, varying by application. Based on these requirements, Table 3 below, specifies the maximum allowable uniformly distributed loads for Durafloor® and Compressed Flooring.

Note: A combination factor of 1.5 applies. At no time shall the design ultimate load exceed 1.5 x concentrated action.

Table 3: Maximum Uniformly Distributed Live Actions (kPa)

Thickness (mm)	Maximum Joist Spacing (mm)		
	300	450	600
Durafloor®			
19	4	4	n/a
22	4	4	4
Compressed Flooring			
15	2	0.5	n/a
18	7.5[1]	7.5	7.5
24	7.5	7.5	7.5

Notes:

1. Shall only be installed long edge across the joists with sheet ends on joist.

3.5 Reference Values of Imposed Floor Actions

Table 4: AS/NZS 1170.1 Table 3.1: Reference Values for Imposed Floor Actions

Type of activity / occupancy for part of building or structure	Specific uses	Reference values of imposed floor actions		Innova Flooring Systems maximum joist spacing (mm)				
		Uniformly distributed actions (kPa)	Concentrated actions (kN)	Durafloor®		Compressed Flooring		
				19mm	22mm	15mm	18mm	24mm
A. Domestic & residential activities (see also Cat C)								
A1. Self-contained dwellings	General areas, private kitchens and laundries in self-contained dwellings.	1.5	1.8[1]	450	600	300	600	600
	Balconies used for floor type activities in self-contained dwellings: (a) less than 1m above ground level.	1.5	1.5kN/m run along edge	450	600	300	600	600
	(b) other.	2.0	1.8[1]	450	600	300	600	600
	Stairs[2] and landings in self- contained dwellings.	2.0	2.7	450[7]	600	x	450	600
	Non-habitable roof spaces in self-contained dwellings.	0.5	1.4	450	600	450	600	600
A2. Other	General areas, bedrooms, hospital wards, hotel rooms, toilet areas.	2.0	1.8[1]	450	600	300	600	600
	Communal kitchens.	3.0	2.7	450[7]	600	x	450	600
	Balconies used for floor-type activities with community access.	Sames as areas providing access max. 7.5kPa	1.8	450	600	x	600	600
B. Offices & work areas not covered elsewhere								
	Operating theatres, X-ray rooms, utility rooms.	3.0	4.5	x	x	x	x	600
	Work rooms (light industrial) without storage.	3.0	3.5	x	450	x	300[8]	600
	Offices for general use.	3.0	2.7[3]	450[7]	600	x	450	600
	Offices for general use with allowance for a safe.	3.0	6.7	x	x	x	x	450
	Communal kitchens.	3.0	2.7	450[7]	600	x	450	600
	Commercial / institutional kitchens.	5.0	4.5	x	x	x	x	600
	Laundries.	3.0	4.5	x	x	x	x	600
	Laboratories.	3.0	4.5	x	x	x	x	600
	Factories, workshops & similar buildings (general industrial).	5.0	4.5	x	x	x	x	600
	Balconies used for floor-type activities.	Sames as areas providing access max. 7.5kPa	1.8	450	600	x	600	600
	Fly galleries (in theatres etc).	4.5kN/m run uniformly distributed over width	-	To be specifically calculated and selected				
	Grids (over areas of proscenium width by stage depth)	2.8	-	To be specifically calculated and selected				
C. Areas where people may congregate								
C1. Areas with tables	Public, institutional & communal dining rooms & lounges, cafes & restaurants.[5]	2.0	2.7	450[7]	600	x	450	600
	Reading rooms with no book storage.	2.5	4.5	x	x	x	x	600
	Classrooms.	3.0	2.7	450[7]	600	x	450	600
C2. Areas with fixed seats[6]	Institutional assembly areas such as classrooms, lecture theatres & similar.	3.0	2.7	450[7]	600	x	450	600
	Public assembly areas such as public halls, theatres, courts of law, auditoria, conference centres & similar.	4.0	2.7	450[7]	600	x	450	600
	Places of worship.	4.0	2.7	450[7]	600	x	450	600
C3. Areas without obstacles for moving people	Corridors, hallways, aisles, stairs[2], landings[2], concourses, terraces, plazas etc not subject to wheeled vehicles.	4.0	4.5	x	x	x	x	600
	Corridors, hallways, aisles, stairs[2], landings[2] etc subject to wheeled vehicles, trolleys etc.	5.0	4.5	x	x	x	x	600

Type of activity / occupancy for part of building or structure	Specific uses	Reference values of imposed floor actions		Innova Flooring Systems maximum joist spacing (mm)				
		Uniformly distributed actions (kPa)	Concentrated actions (kN)	Durafloor®		Compressed Flooring		
				19mm	22mm	15mm	18mm	24mm
C. Areas where people may congregate ...cont								
C3. Areas without obstacles for moving people	Footpaths, terraces and plazas at ground level subject to wheeled vehicles.	5.0	31.0(4)	x	x	x	x	x
	Museum floors and art galleries for exhibition purposes.	4.0	4.5	x	x	x	x	600
	Balconies used for floor-type activities.	Sames as areas providing access max. 7.5kPa	1.8	450	600	x	600	600
C4. Areas with possible physical activities	Dance halls and studios, gymnasia.	5.0	3.6	x	x	x	300(8)	600
	Drill halls and drill rooms.	5.0	9.0	x	x	x	x	300
C5. Areas susceptible to overcrowding	Assembly areas without fixed seating(6) (concert halls, bars, vestibules, public lounges, places of worship, shopping malls) and grandstands.	5.0	3.6	x	x	x	300(8)	600
	Stages in public assembly areas.	7.5	4.5	x	x	x	x	600
D. Shopping Areas								
	Shop floors for the sale and display of merchandise.	4.0	3.6	x	x	x	300(8)	600
E. Warehousing & storage areas. Areas subject to accumulation of goods. Areas for equipment and plant								
	Reading rooms with book storage e.g., libraries.	4.0	4.5	x	x	x	x	600
	General storage other than those specified in this table.	2.4 for each metre of storage height	7.0	x	x	x	x	300
	Free rolling office compactus, for general filing, up to 2m high.	3.0 for each metre of storage height	to be calculated	x	x	x	x	x
	File rooms, office storage space, vaults and strongrooms	5.0	4.5	x	x	x	x	600
	Stack rooms (books)	3.3 for each metre of storage height	7.0		x	x	x	300
	Paper storage for printing plants and stationery stores, packed book storage.	4.0 for each metre of storage height	9.0	x	x	x	x	300
	Mobile stacking, mechanically operated heavy shelving (wheels on rails e.g., compactus).	4.0 for each metre of storage height but not less than 10.0	to be calculated	x	x	x	x	x
	Cold storage	4.5 for each metre of storage height but with a minimum of 15.0	9.0	x	x	x	x	300
	Plant rooms, fan rooms etc, including weight of machinery.	5.0	4.5	x	x	x	x	600
	Areas around equipment in boiler rooms (weight of equipment to be determined).	5.0	4.5	x	x	x	x	600

Notes:

1. For AS/NZS 1170.1 T3.1 domestic & residential activities, 1.8kN concentrated action shall be applied over an area not less than 350mm^2 (Refer to Note 1, AS/NZS 1170.1, Table 3.1); and 2.7kN concentrated actions, shall be applied over an area not less than 0.01m2 (Refer to AS/NZS 1170.1, Cl.3.2(b)).

2. Where a stair tread or landing is structurally independent of the adjoining elements, it shall be capable of withstanding a line load of 2.2kN/m of span of tread or landing. Boards shall be fully supported at stair treads or landings.

3. A concentrated action of 6.7kN shall be used where a general allowance for safes is made (see separate table entry).

4. The concentrated action shall be applied over a minimum area of 0.025m^2 for calculation of punching or crushing.

5. Where these same areas may be subjected to actions due to physical activities or overcrowding (for example a hotel dining room used as a dance floor), imposed actions shall be based on occupancy C4 or C5, as appropriate.

6. Fixed seating is seating where the removal of the seating and the use of the space for other purposes is not likely.

7. Serviceability deflection limit of Span/280 achieved. Ultimately, the designer must ensure deflection of the substrate does not exceed the capacity of the specified floor covering for their particular application.

8. Shall only be installed long edge across the joists with sheet ends on joist.

9. Sheets may be installed long edge parallel or perpendicular to joists with sheet joints made on-joist, unless noted otherwise (see (8)). When sheets are laid with the long edge parallel to the joists; trimmers must be added so that all sheet edges and joints are supported. In all cases a floor joist or trimmer must support the sheet end.