UL-EU CERTIFICATE

Certificate No.	UL-EU-00771-CPR
Page	1/157
Date of Issue	2015-04-19
Revised	2022-10-19
Certificate Holder	FSi Ltd Westminster Industrial Estate Tamworth Rd Measham DE12 7DS United Kingdom
Manufacturer	A/008
Certified Product Type	Fire Stop – Coated Board
Product Trade Name	Stopseal 50 Coated Board / Stopseal 60 Coated Board / Stopseal Batt
Trademark	N/A
Rating/Classification	See Appendix
Harmonised Technical Specifications	ETAG 026-2 / EN 13501-2 / EN 13501-3
Supporting Documentation	ETA 14/0005, EC – CERTIFICATE OF CONSTANCY OF PERFORMANCE - 1121 – CPR – JA5021, Classification Report No. 4789513566, Assessment Report No. 4790552307-1
Additional information	Additional test evidence is held on file
Expiry date	2025-04-19

Authorized Certification Decision Maker
Chris Johnson

This is to certify that representative samples of the Certified Product listed above have been investigated by Underwriters Laboratories to the Standard(s) indicated on this Certificate, in accordance with the UL Global Services Agreement and the UL-EU Mark Service Terms and Conditions ("Agreement"). The Certificate Holder is entitled to use the UL-EU Mark for the Certified Product listed on the certificate and manufactured at the production site(s) listed, in accordance with the terms of the Agreement. Only those products bearing the UL-EU Mark for Europe should be considered as being covered by UL's UL-EU Mark Service. This Certificate shall remain valid through the Expiration date, unless a Standard identified on this Certificate is amended or withdrawn prior to that date or there is a non-compliance with the Agreement.

Appendix UL-EU CERTIFICATE

This certificate relates to the use of Stopseal 50 Coated Board / Stopseal 60 Coated Board / Stopseal Batt for fire stopping where services penetrate floors and walls. The detailed scope is given in pages 3 to 156 of this Certificate. This shows the thickness and acceptable dimensions, substrates and orientations required to provide fire resistance periods of up to 120 minutes (EI 120).

The product is certificated on the basis of:

i) Inspection and surveillance of factory production control by UL
ii) Fire resistance test data in accordance with 1366-3: 2009 & EN 1366-1: 2000
iii) Classification in accordance with EN 13501-2 & EN 13501-3
iv) Assessment report in accordance with EN 15725: 2010
v) Durability and Servicability as defined in ETAG 026-2

The durability class of Stopseal 50 Coated Board / Stopseal 60 Coated Board / Stopseal Batt is Z_1 - intended for use at internal conditions with high humidity, excluding temperatures below 0°C

VOC test report – Indoor Air Comfort GOLD® referenced – eurofins 392-2017-00008801_A_EN, is also available.

Fire resisting & smoke extraction ducts penetrating the Stopseal Coated board shall be classified (EN13501-3/4) for the required performance period, in addition to the details given on page 156.

The term “Flexible Walls” covers both plasterboard walls and Promat DURASTEEL® walls. Where penetrations pass through Promat DURASTEEL® walls the aperture must be “letterboxed” out with the same sized channel as used for the main support frame. In addition, where the installed STOPSEAL® BATT is thinner than the overall thickness of the wall, the reveals must be lined with the same number of Promat DURASTEEL® layers that are over the main supporting frame.

Appendix UL-EU CERTIFICATE

Product-type: Coated board	Intended use: Penetration Seal	
Basic requirement for construction work	Basic Requirement	Basic requirement for construction work
BWR 1 Mechanical resistance and stability		
-	None	-
BWR 2 Safety in case of fire		
EN 13501-1	Reaction to fire	Class E
EN 13501-2	Resistance to fire	See pages 7 to 156
BWR 3 Hygiene, health and environment		
EN 1026:2000	Air permeability (material property)	See page 4
ETAG 026-3, Annex C	Water permeability (material property)	No performance determined
Declaration of manufacturer	Release of dangerous substances	Declaration of manufacturer
BWR 4 Safety in use		
EOTA TR 001:2003	Mechanical resistance and stability	No performance determined
EOTA TR 001:2003	Resistance to impact/movement	No performance determined
EOTA TR 001:2003 ISO 11600	Adhesion	No performance determined
BWR 5 Protection against noise		
EN 10140-2/ EN ISO 717-1	Airborne sound insulation	Rw ($C;C_{tr}$)= 24(-2;-3) and See pages 5&6
EN 10140-3/ EN ISO 717-2	Impact sound insulation	No performance determined
BWR 6 Energy economy and heat retention		
EN 12664, EN 12667 or EN 12939	Thermal properties	No performance determined
EN ISO 12572 EN 12086	Water vapour permeability	No performance determined
General aspects relating to fitness for use		
ISO 8339: 2005, ISO 9046: 2004 & ISO 7389: 2003	Durability and serviceability	Z_1
BWR 7 Sustainable use of natural resources		
-	-	No performance determined

Appendix UL-EU CERTIFICATE

Stopseal 50 Coated Board: Air Permeability according to BS EN 1026				
Pressure (Pa)	**Results under positive chamber pressure**		**Results under negative chamber pressure**	
	Leakage (m^3/h)	**Leakage (m^3/m^2/ h)**	**Leakage (m^3/h)**	**Leakage (m^3/m^2/ h)**
50	0.6	0.8	1.1	1.5
100	1.0	1.4	1.3	1.8
150	2.8	3.9	1.5	2.1
200	3.8	5.3	1.9	2.6
250	4.5	6.3	2.0	2.8
300	5.0	6.9	2.4	3.3
450	5.1	7.1	1.9	2.6
600	6.7	9.3	2.2	3.1

Appendix UL-EU CERTIFICATE

Certificate No. UL-EU-00771-CPR
Page 5/157
Date of Issue 2015-04-19

Stopseal 50 Coated Board: Acoustic performance according to BS EN ISO 10140-2:2010		
Configuration	**R_w(C; C_{tr}) Specimen only, 1m^2**	**D_{new} Partition & Specimen, 14.2m^2**
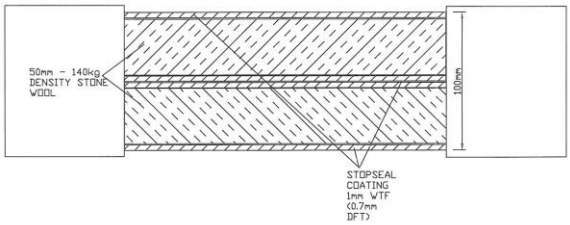	27 (0; -2) 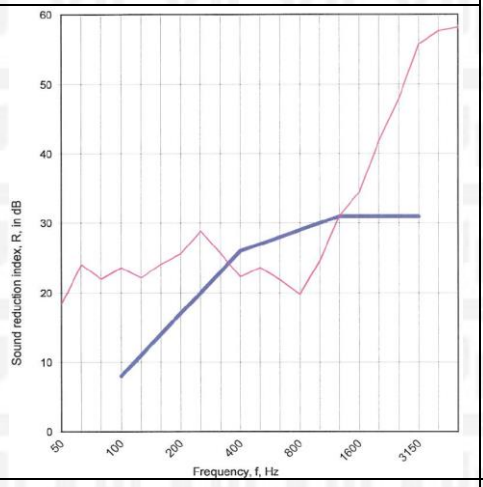	37 (0; -2)
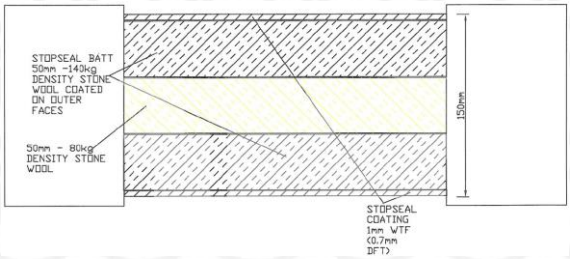	48 (-3; 16) 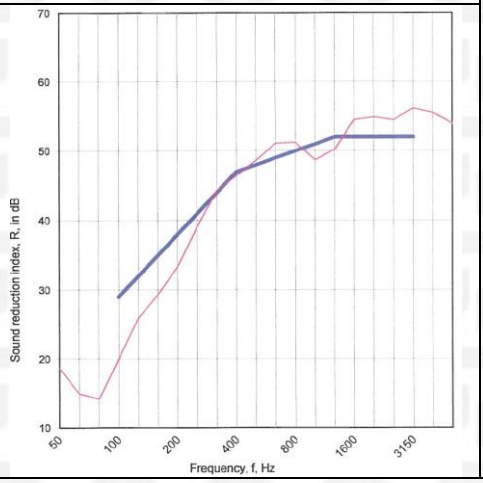	58 (-3; 16)

Appendix UL-EU CERTIFICATE

Stopseal 50 Coated Board: Acoustic performance according to BS EN ISO 10140-2:2010		
Configuration	**R_w(C; C_{tr}) Specimen only, 1m^2**	**D_{new} Partition & Specimen, 14.2m^2**
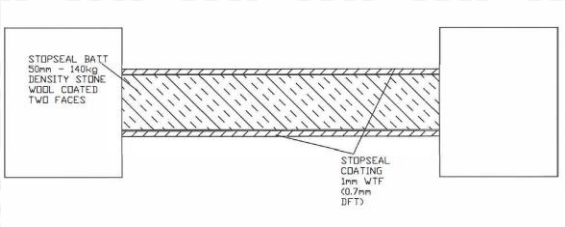	24 (-2; -3) 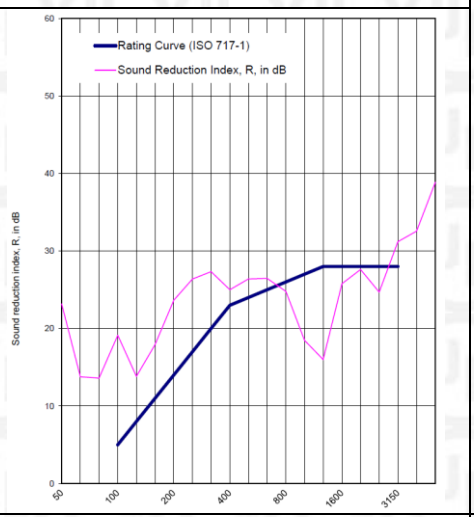	35 (-2; -4)
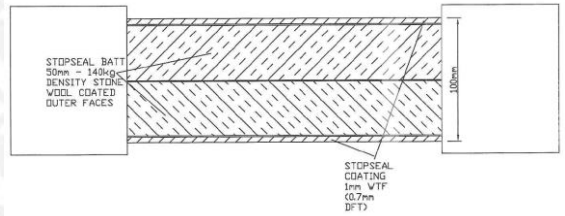	41 (-2; -7) 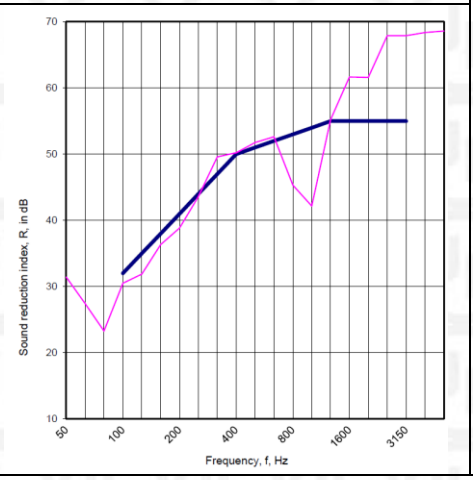	51 (-2; -7)

Appendix UL-EU CERTIFICATE

Rigid Walls Minimum Thickness 70mm

Single Layer Pattress Stopseal Fire Batt 50mm, Electrical Cables

Max Aperture 730mm Wide x 1200mm High

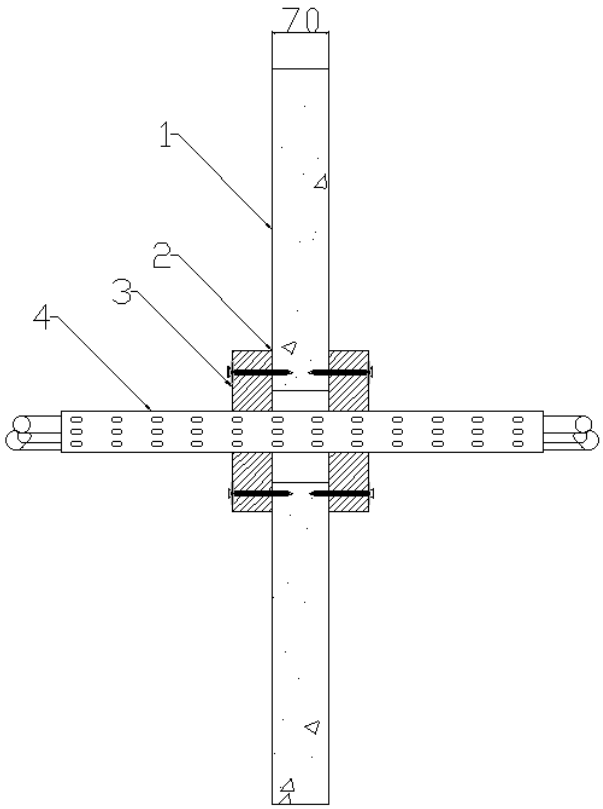

Key
1. Supporting Construction
2. Pyrocoustic Sealant
3. Stopseal Batt
4. Service Penetration

Service(s)	Classification
500mm wide x 60mm deep steel cable basket containing 3 x type 'B' cable and 20 x bundle of telecoms cables	EI 90
500mm wide x 60mm deep steel cable tray containing 1 x type 'B' cable, 3 x type 'A1' cable, 3 x type 'A2' cable, and 3 x type 'A3' cable	

[1]Patress installation of Stopseal Coated Batt. The Batts are installed in horizontal rows and fixed on all edges. Overlap of batts to substrate min 50mm. Batts mechanically fixed to substrate with min 6mm x 80mm steel screws and steel retaining washer. Fixings installed at max 300mm centres

Appendix UL-EU CERTIFICATE

Single Layer Pattress Stopseal Fire Batt 50mm, Electrical Cables and Conduits

Max Aperture 730mm Wide x 1200mm High

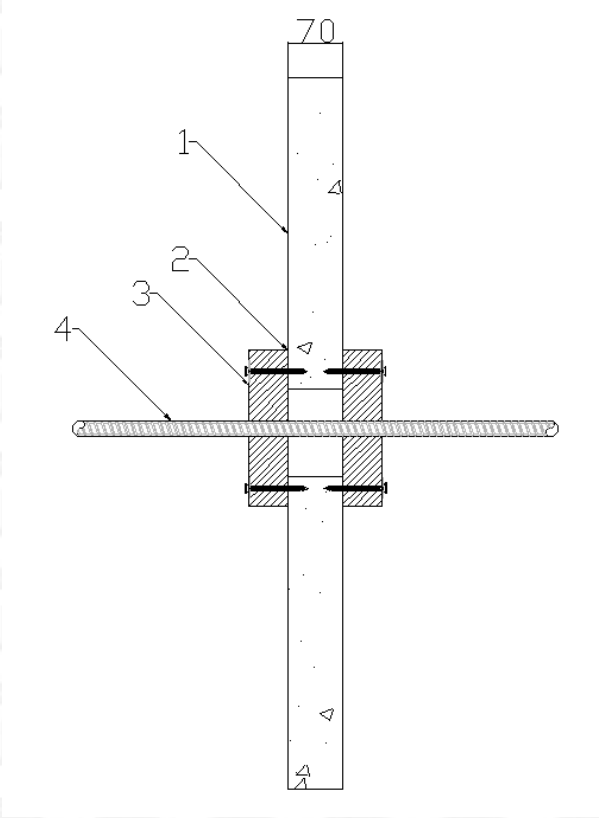

Key
1. Supporting Construction
2. Pyrocoustic Sealant
3. Stopseal Batt
4. Service Penetration

Service(s)	**Classification**
20mm dia Adaptaflex SPL20 flexible conduit	EI 90
20mm dia Kopex KSU 316 stainless steel flexible conduit	
150mm wide x 60mm deep steel cable tray containing 4 x FP200 Gold (Firealarm cable 7mm dia red) Cables	E 90 EI 60

[1]Patress installation of Stopseal Coated Batt. The Batts are installed in horizontal rows and fixed on all edges. Overlap of batts to substrate min 50mm. Batts mechanically fixed to substrate with min 6mm x 80mm steel screws and steel retaining washer. Fixings installed at max 300mm centres

Appendix UL-EU CERTIFICATE

Single Layer Pattress Stopseal Fire Batt 50mm, Electrical Cables

Max Aperture 2600mm Wide x 2600mm High

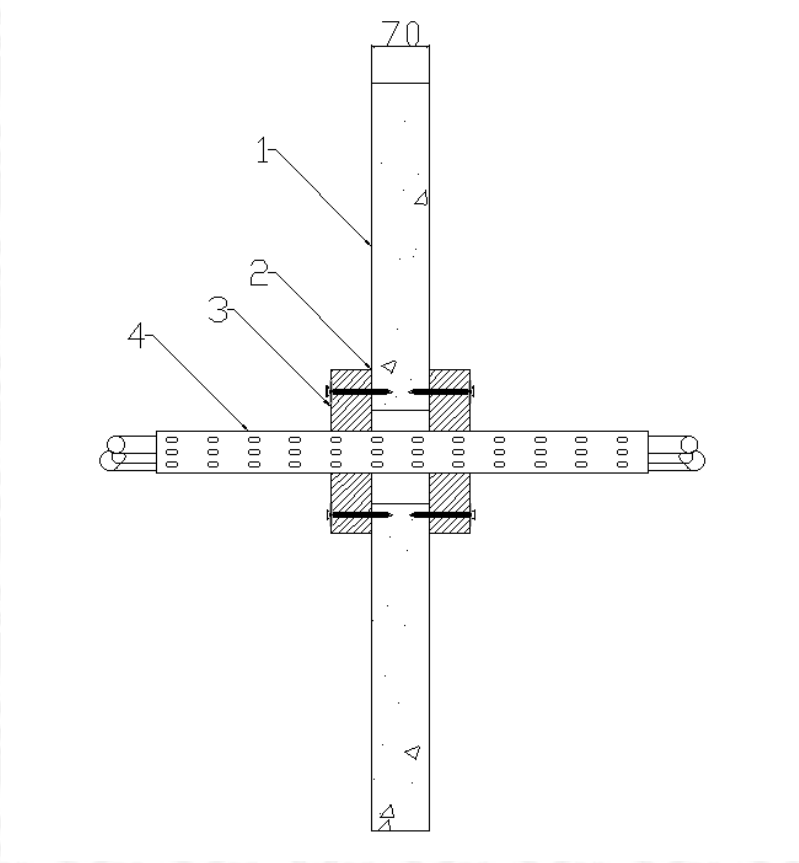

Key
1. Supporting Construction
2. Pyrocoustic Sealant
3. Stopseal Batt
4. Service Penetration

Service(s)	**Classification**
500mm wide x 60mm deep steel cable basket containing 3 x type 'B' cable and 20 x bundle of telecoms cables	EI 60
500mm wide x 60mm deep steel cable tray containing 1 x type 'B' cable, 3 x type 'A1' cable, 3 x type 'A2' cable, and 3 x type 'A3' cable	

[1]Patress installation of Stopseal Coated Batt. The Batts are installed in horizontal rows and fixed on all edges. Overlap of batts to substrate min 50mm. Batts mechanically fixed to substrate with min 6mm x 80mm steel screws and steel retaining washer. Fixings installed at max 300mm centres

Appendix UL-EU CERTIFICATE

Single Layer Pattress Stopseal Fire Batt 50mm, Electrical Cables and Conduits

Max Aperture 2600mm Wide x 2600mm High

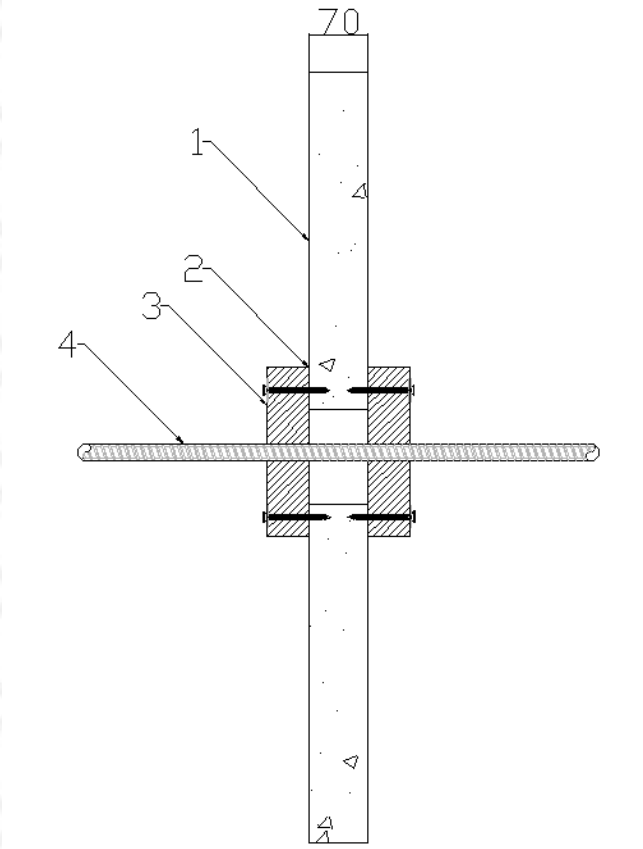

Key
1. Supporting Construction
2. Pyrocoustic Sealant
3. Stopseal Batt
4. Service Penetration

Service(s)	**Classification**
20mm dia Adaptaflex SPL20 flexible conduit	EI 60
20mm dia Kopex KSU 316 stainless steel flexible conduit	
150mm wide x 60mm deep steel cable tray containing 4 x FP200 Gold (Firealarm cable 7mm dia red) Cables	EI 60

[1]Patress installation of Stopseal Coated Batt. The Batts are installed in horizontal rows and fixed on all edges. Overlap of batts to substrate min 50mm. Batts mechanically fixed to substrate with min 6mm x 80mm steel screws and steel retaining washer. Fixings installed at max 300mm centres

Appendix UL-EU CERTIFICATE

Rigid Walls Minimum Thickness 75mm

Single Layer Pattress Stopseal Fire Batt 50mm, Electrical Cables and Cable Trunking

Max Aperture 2600mm Wide x 2600mm High

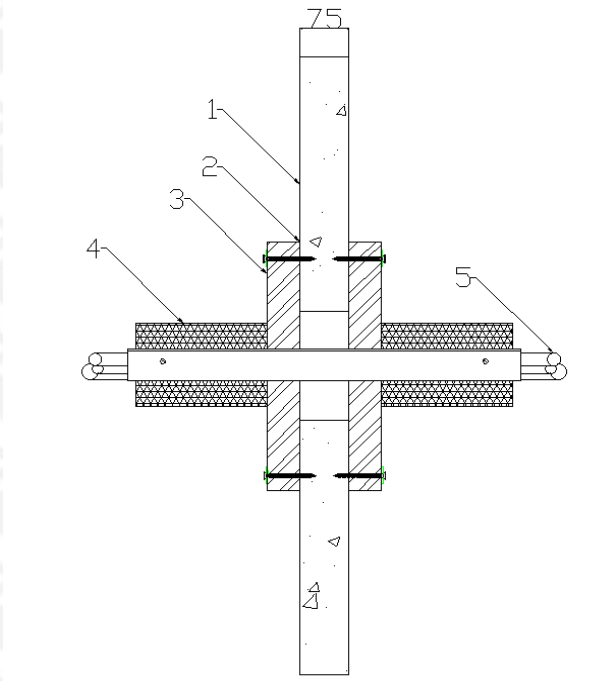

Key
1. Supporting Construction
2. Pyrocoustic Sealant
3. Stopseal Batt
4. Insulation
5. Service Penetration

Service(s)	Classification
150mm x 150mm Insulated steel cable trunking, Stone Wool 40mm thick, 45kg/m^3 (LI 400mm). FSi S-Line Pillows tightly fitted around the cables in the section of trunking within the depth of the partition	EI 60 U/U
Cables 1xB1, 1xC1, 1xG1, 1xG2	EI 60
Cables 1xB1	
Cables 1xC1	
Unsheathed electrical cables 0-24mm dia	

[1]Patress installation of Stopseal Coated Batt. The Batts are installed in horizontal rows and fixed in minimum two vertical edges. Overlap of batts to substrate min 50mm. Batts mechanically fixed to substrate with min 6mm x 80mm steel screws and steel retaining washer. Fixings installed at max 300mm centres

Appendix UL-EU CERTIFICATE

Single Layer Pattress Stopseal Fire Batt 50mm, Electrical Cables and Cable Trunking

Max Aperture 2600mm Wide x 2600mm High

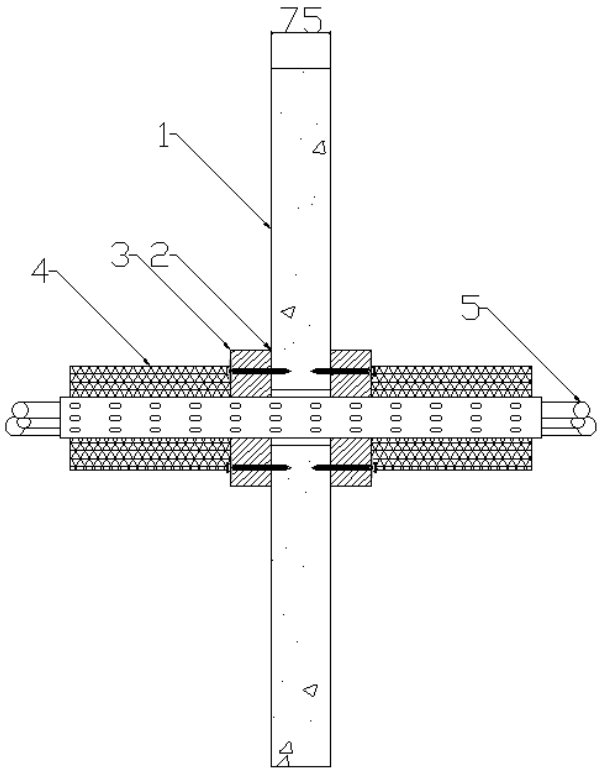

Key
1. Supporting Construction
2. Pyrocoustic Sealant
3. Stopseal Batt
4. Insulation
5. Service Penetrations

Service(s)	**Classification**
50mm x 50mm Insulated steel cable trunking, Stone Wool 40mm thick, 45kg/m^3 (LI 400mm). FSi S-Line Pillows tightly fitted around the cables in the section of trunking within the depth of the partition	EI 60 U/U
Cables 1xA1, 1xA2, 1xA3	EI 60
Cables 1xA1	
Cables 1xA2	
Cables 1xA3	

[1]Patress installation of Stopseal Coated Batt. The Batts are installed in horizontal rows and fixed in minimum two vertical edges. Overlap of batts to substrate min 50mm. Batts mechanically fixed to substrate with min 6mm x 80mm steel screws and steel retaining washer. Fixings installed at max 300mm centres

Appendix UL-EU CERTIFICATE

Single Layer Stopseal Fire Batt 50mm, Plastic Pipes

Max Aperture 600mm Wide x 600mm High
(Penetrations positioned as per option 1 or 2 below, 0mm distance between services and 50mm to edge of seal)
Collars secured both faces of the substrate utilising 80mm long steel pig tail screw through to Stopseal Fire Batt

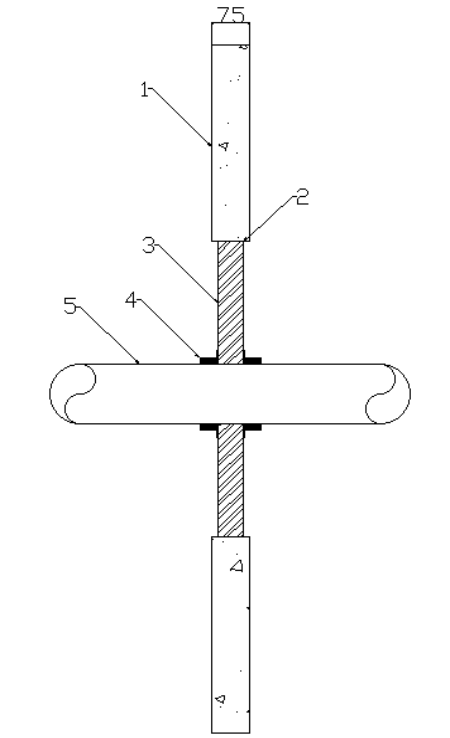

Key
1. Supporting construction
2. Pyrocoustic Sealant
3. Stopseal Batt
4. PipeBloc PCP
5. Service Penetration

Service(s)	PipeBloc PCP Ref	Classification
PVC Pipe 32mm Ø, 1.8mm wall thickness	32mm	EI 60 U/C
PVC Pipe 40mm Ø, 1.8mm wall thickness	40mm	
PVC Pipe 50mm Ø, 1.8mm wall thickness	50mm	
PVC Pipe 55mm Ø, 1.8-2.3mm wall thickness	55mm	
PVC Pipe 63mm Ø, 2.3-3mm wall thickness	63mm	
PVC Pipe 75mm Ø, 3.1-4.8mm wall thickness	75mm	
PVC Pipe 82mm Ø, 3.1-4.8mm wall thickness	82mm	
PVC Pipe 90mm Ø, 4.2-7.4mm wall thickness	90mm	
PVC Pipe 100mm Ø, 4.2-7.4mm wall thickness	100mm	
PVC Pipe 110mm Ø, 4.2-7.4mm wall thickness	110mm	
PVC Pipe 125mm Ø, 6mm wall thickness	125mm	
PVC Pipe 140mm Ø, 6.1-7.5mm wall thickness	140mm	

Appendix UL-EU CERTIFICATE

Max Aperture 600mm Wide x 600mm High
(Penetrations positioned as per option 1 or 2 below, 0mm distance between services and 50mm to edge of seal)
Collars secured both faces of the substrate utilising 80mm long steel pig tail screw through to Stopseal Fire Batt

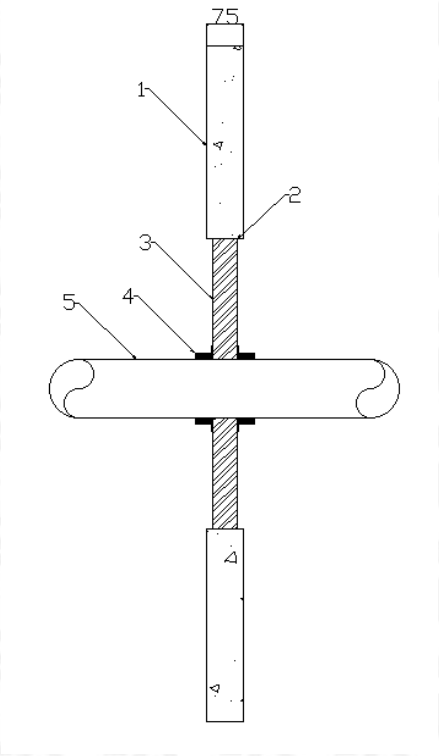

Key
1. Supporting construction
2. Pyrocoustic Sealant
3. Stopseal Batt
4. PipeBloc PCP
5. Service Penetration

Service(s)	PipeBloc PCP Ref	Classification
PE Pipe 32mm Ø, 2.9mm wall thickness	32mm	EI 60 U/C
PE Pipe 40mm Ø, 2.9mm wall thickness	40mm	
PE Pipe 50mm Ø, 2.9mm wall thickness	50mm	
PE Pipe 55mm Ø, 2.9-4.4mm wall thickness	55mm	
PE Pipe 63mm Ø, 2.9-4.4mm wall thickness	63mm	
PE Pipe 75mm Ø, 2.8-6.7mm wall thickness	75mm	
PE Pipe 82mm Ø, 2.8-6.7mm wall thickness	82mm	
PE Pipe 90mm Ø, 2.7-10mm wall thickness	90mm	
PE Pipe 100mm Ø, 2.7-10mm wall thickness	100mm	
PE Pipe 110mm Ø, 2.7-10mm wall thickness	110mm	
PE Pipe 125mm Ø, 3.1mm wall thickness	125mm	
PE Pipe 140mm Ø, 3.9-5.8mm wall thickness	140mm	
PE Pipe 160mm Ø, 4.9-9.5mm wall thickness	160mm	

Appendix UL-EU CERTIFICATE

Max Aperture 600mm Wide x 600mm High
(Penetrations positioned as per option 1 or 2 below, 0mm distance between services and 50mm to edge of seal)
Collars secured both faces of the substrate utilising 80mm long steel pig tail screw through to Stopseal Fire Batt

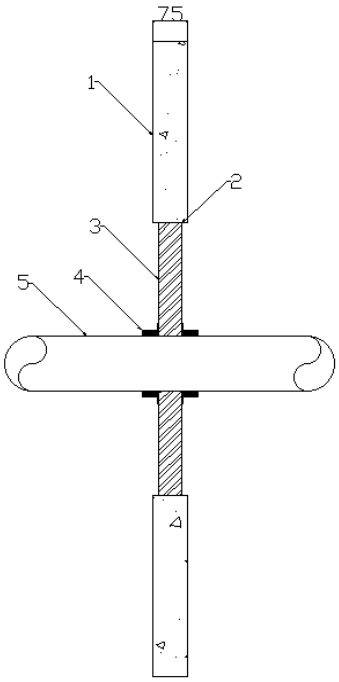

Key
1. Supporting construction
2. Pyrocoustic Sealant
3. Stopseal Batt
4. PipeBloc PCP
5. Service Penetration

Service(s)	PipeBloc PCP Ref	Classification
PP Pipe 32mm Ø, 2.9mm wall thickness	32mm	EI 60 U/C
PP Pipe 40mm Ø, 2.9mm wall thickness	40mm	
PP Pipe 50mm Ø, 2.9mm wall thickness	50mm	
PP Pipe 55mm Ø, 2.9-4.4mm wall thickness	55mm	
PP Pipe 63mm Ø, 2.9-4.4mm wall thickness	63mm	
PP Pipe 75mm Ø, 2.8-6.7mm wall thickness	75mm	
PP Pipe 82mm Ø, 2.8-6.7mm wall thickness	82mm	
PP Pipe 90mm Ø, 2.7-10mm wall thickness	90mm	
PP Pipe 100mm Ø, 2.7-10mm wall thickness	100mm	
PP Pipe 110mm Ø, 2.7-10mm wall thickness	110mm	
PP Pipe 125mm Ø, 3.1mm wall thickness	125mm	
PP Pipe 140mm Ø, 3.5-8mm wall thickness	140mm	
PP Pipe 160mm Ø, 4-14.6mm wall thickness	160mm	

Appendix UL-EU CERTIFICATE

Rigid Walls Minimum Thickness 100mm

Double Layer Stopseal Fire Batt 50mm, Electrical Cables and Conduits

Max Aperture 2600mm Wide x 2600mm High

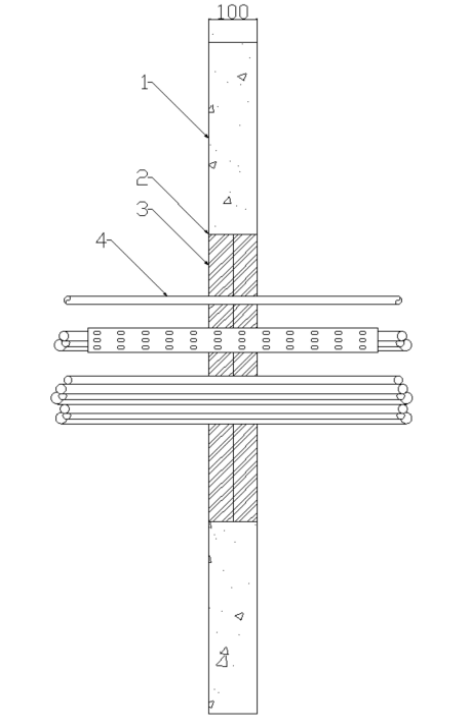

Key
1. Supporting construction
2. Pyrocoustic Sealant
3. Stopseal Batt
4. Service Penetration

Service(s)	Classification
Electrical cables 0mm to 21mm dia	EI 60
Electrical cables 22mm to 50mm dia	E 60 EI 45
Electrical cables 51mm to 80mm dia	E 60 EI 30
Cable Trays and Ladders	E 60 EI 45
100 mm diameter bundle telecommunication cable type “F”	EI 60
Unsheathed electrical cables 0-24mm dia	
Steel or Copper Conduits up to 16mm	E 60 C/U
Plastic conduits up to 16mm	EI 60 C/U

Appendix UL-EU CERTIFICATE

Double Layer Stopseal Fire Batt 50mm, Insulated Metallic Pipes

Max Aperture 730mm Wide x 1200mm High	
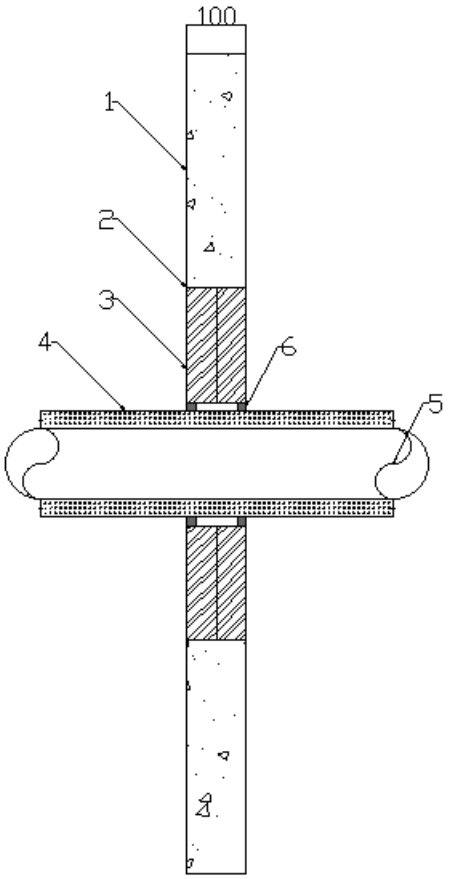	Key 1. Supporting construction 2. Pyrocoustic Sealant 3. Stopseal Batt 4. Insulation 5. Penetration Service 6. Pyropro HPE
Service(s)	**Classification**
[1]Single copper or mild steel pipe 40mm diameter and 1.5 – 14.2 mm wall with sustained/continuous 20mm thick foil faced glass wool insulation (min 80Kg/m^3)	E 90 U/C EI 60 U/C
[1]Single copper or mild steel pipe 40-159mm diameter and 1.5 – 14.2 mm wall (see graph below) with sustained/continuous 30mm thick foil faced glass wool insulation (min 80Kg/m^3)	EI 60 U/C

[1]15mm deep x 15mm wide annulus Pyropro HPE Sealant to both faces of the pipe

Appendix UL-EU CERTIFICATE

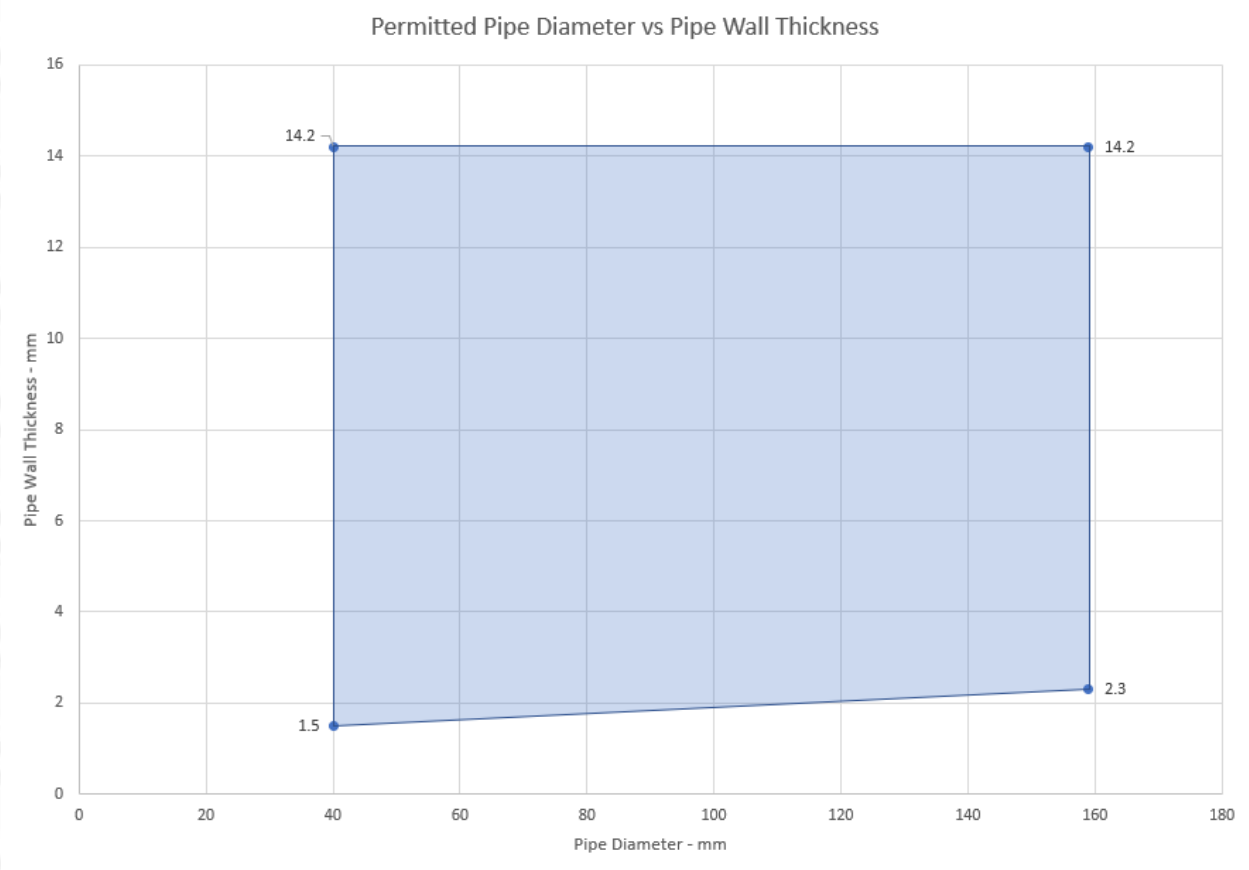

Appendix UL-EU CERTIFICATE

Max Aperture 2600mm Wide x 2600mm High

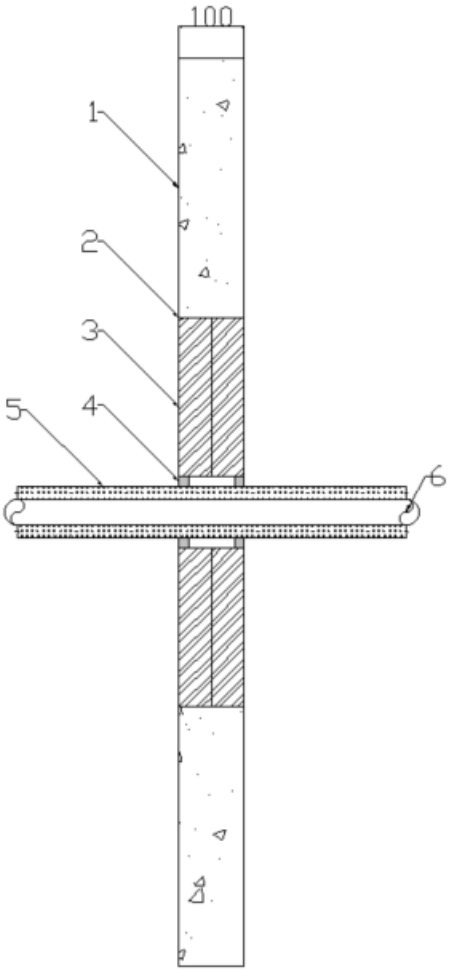

Key
1. Supporting construction
2. Pyrocoustic Sealant
3. Stopseal Batt
4. Pyropro HPE
5. Insulation
6. Penetration Service

Service(s)	Classification
[1]Single copper or mild steel pipe 40mm diameter and 1.5 – 14.2 mm wall with sustained/continuous 20mm thick foil faced glass wool insulation (min 80Kg/m^3)	EI 60 U/C
[1]Single copper or mild steel pipe 40-159mm diameter and 1.5 – 14.2 mm wall (see graph below) with sustained/continuous 30mm thick foil faced glass wool insulation (min 80Kg/m^3)	EI 60 U/C

[1]15mm deep x 15mm wide annulus Pyropro HPE Sealant to both faces of the pipe

Appendix UL-EU CERTIFICATE

Certificate No. UL-EU-00771-CPR
Page 20/157
Date of Issue 2015-04-19

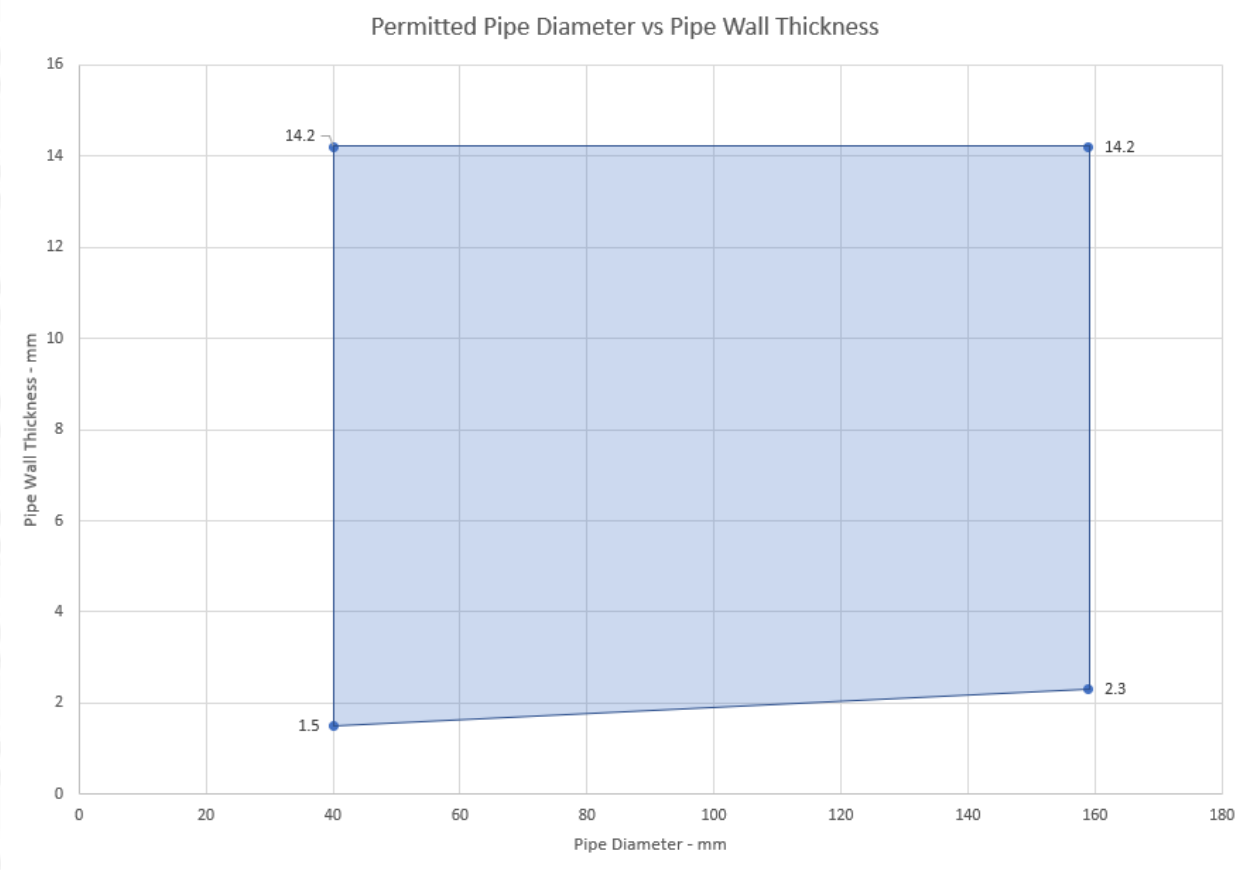

Appendix UL-EU CERTIFICATE

Certificate No. UL-EU-00771-CPR
Page 21/157
Date of Issue 2015-04-19

Max Aperture 730mm Wide x 1200mm High

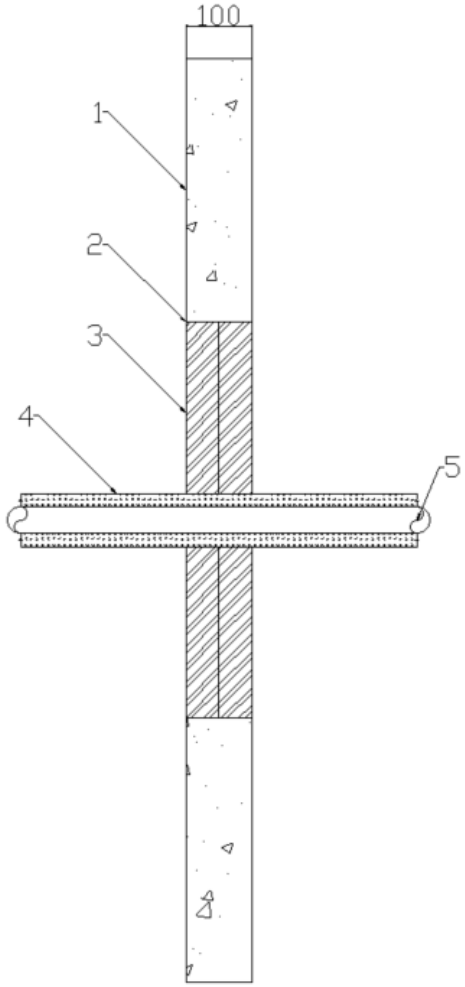

Key
1. Supporting construction
2. Pyrocoustic Sealant
3. Stopseal Batt
4. Insulation
5. Penetration Service

Service(s)	Classification
Steel or Copper Pipe 42-159mm Ø, 1.0mm – 14.2mm wall thickness (see graph below). 25mm thick foil faced glassfibre insulation min. 30kg/m^3 (C/S)	E 120 C/U EI 45 C/U
Steel or Copper Pipe 42mm Ø, 1mm – 14.2mm wall thickness. 25mm thick foil faced glassfibre insulation min. 30kg/m^3 (C/S)	E 120 C/U EI 60 C/U

Appendix UL-EU CERTIFICATE

Certificate No. UL-EU-00771-CPR
Page 22/157
Date of Issue 2015-04-19

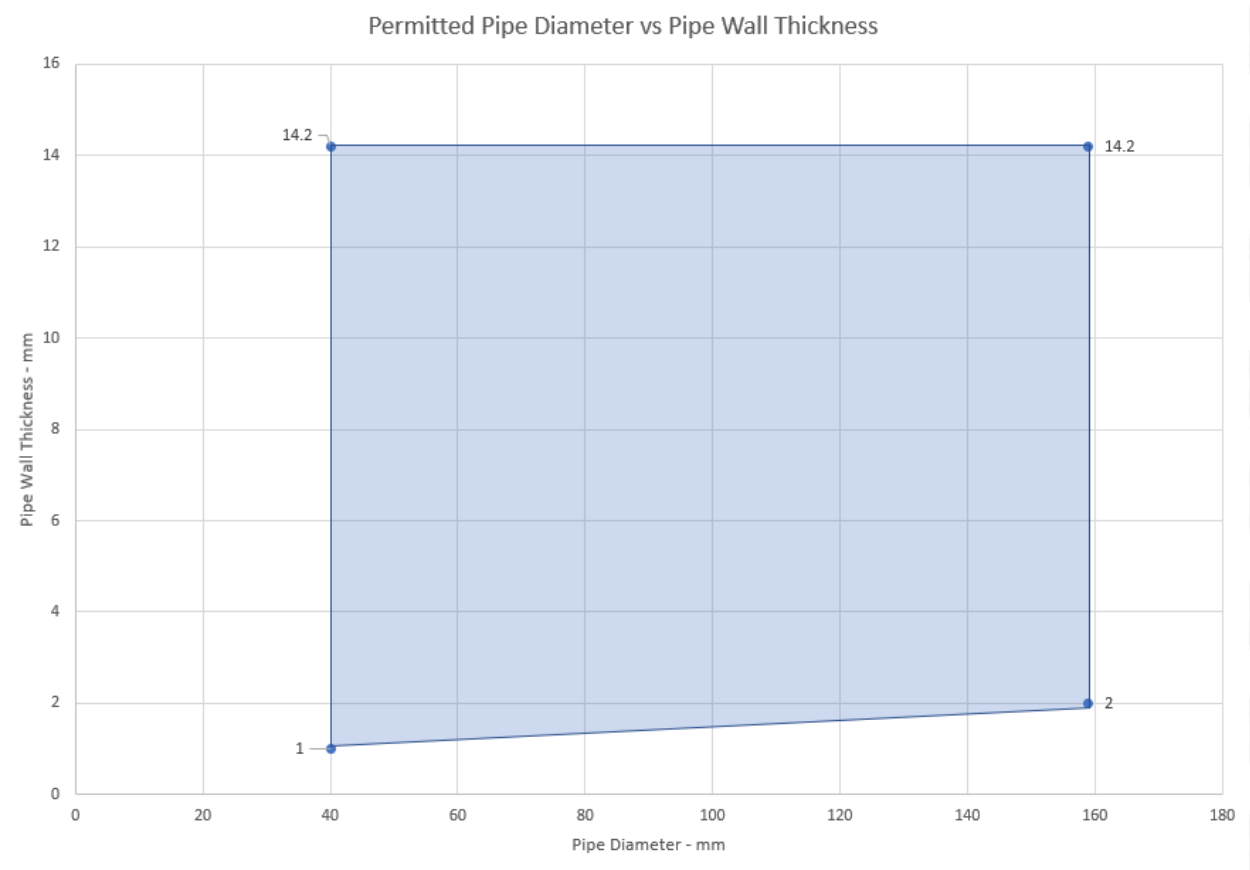

Appendix UL-EU CERTIFICATE

Certificate No. UL-EU-00771-CPR
Page 23/157
Date of Issue 2015-04-19

Max Aperture 2600mm Wide x 2600mm High

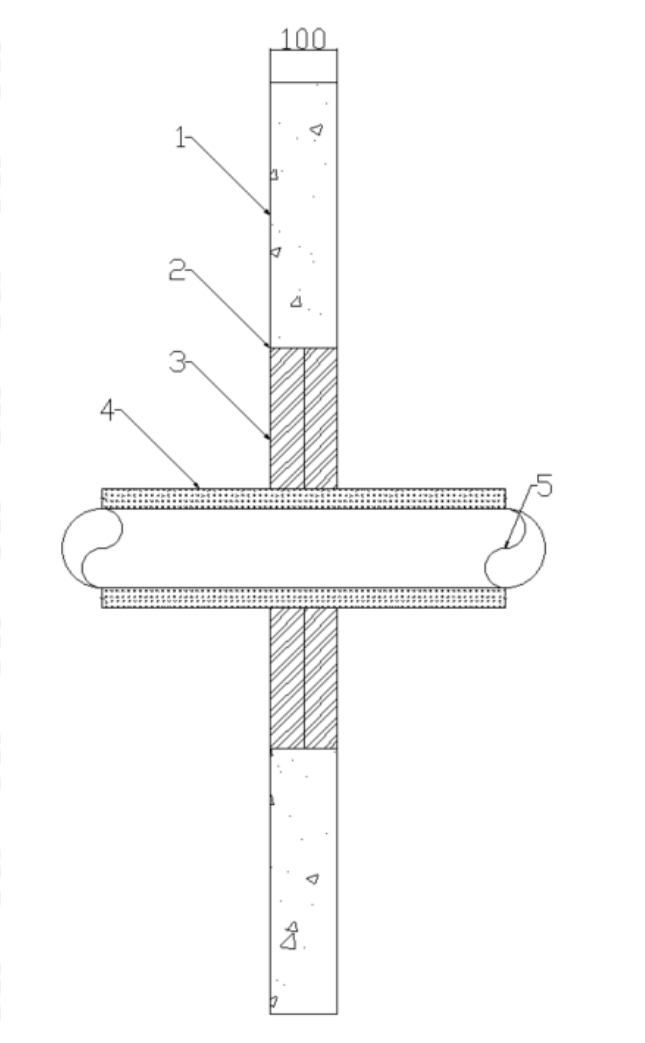

Key
1. Supporting construction
2. Pyrocoustic Sealant
3. Stopseal Batt
4. Insulation
5. Penetration Service

Service(s)	Classification
Steel or Copper Pipe 42-159mm Ø, 1.0mm – 14.2mm wall thickness (see graph below). 25mm thick foil faced glassfibre insulation min. 30kg/m^3 (C/S)	E 60 C/U EI 45 C/U
Steel or Copper Pipe 42mm Ø, 1mm – 14.2mm wall thickness. 25mm thick foil faced glassfibre insulation min. 30kg/m^3 (C/S)	E 60 C/U EI 60 C/U

Appendix UL-EU CERTIFICATE

Certificate No. UL-EU-00771-CPR
Page 24/157
Date of Issue 2015-04-19

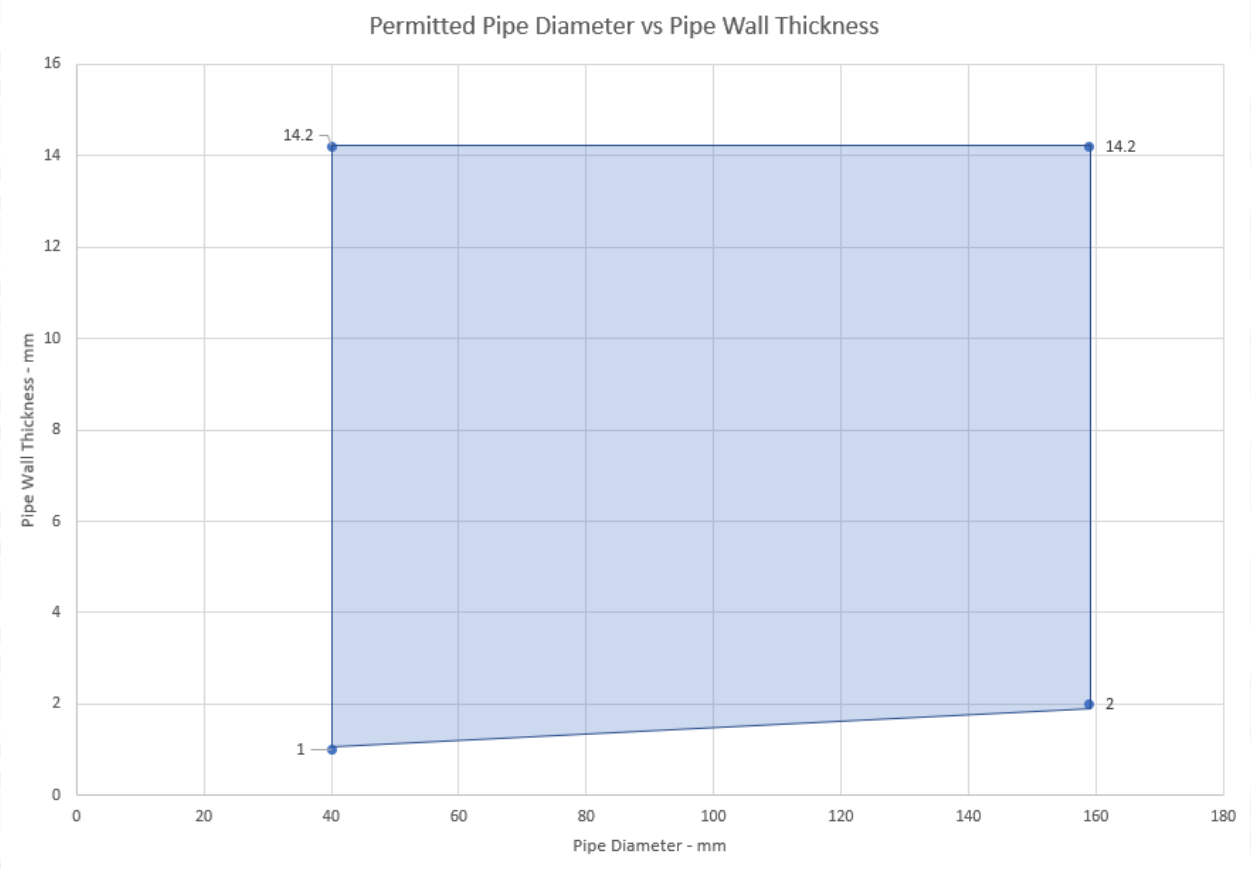

Appendix UL-EU CERTIFICATE

Max Aperture 730mm Wide x 1200mm High
(Penetrations positioned as per option 1 or 2 below, 0mm distance between services and 50mm to edge of seal)

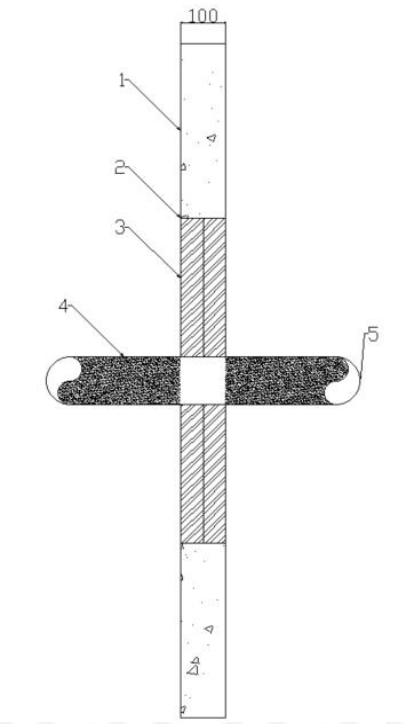

Key
1. Supporting construction
2. Pyrocoustic Sealant
3. Stopseal Batt
4. PST Coating
5. Penetration Service

Service(s)	Classification
Steel or Copper Pipe 108mm Ø, 1.5mm – 14.2mm wall thickness, 50mm thick foil faced stonewool insulation min. 100kg/m^3 (L/I 500mm)	E 120 C/U EI 45 C/U
Steel or Copper Pipe 108mm Ø, 1.5mm – 14.2mm wall thickness, 50mm thick foil faced stonewool insulation min. 100kg/m^3 (C/I)	E 120 C/U EI 60 C/U
Steel or Copper Pipe 42-159mm Ø, 1.0mm – 14.2mm wall thickness (see graph below), 40mm thick foil faced stonewool insulation min. 40kg/m^3 (L/I 400mm)	EI 45 C/U
Steel 42-324mm Ø, 16mm wall thickness. 40mm thick foil faced stonewool insulation min. 40kg/m^3 (L/I 400mm)	EI 45 C/U
Steel or Copper Pipe 42mm Ø, 1.0mm – 14.2mm wall thickness , FSi PST coating along the penetration 2mm DFT (L/I 300mm)	E 120 C/U EI 45 C/U
Steel or Copper Pipe 42-159mm Ø, 1.0mm – 14.2mm wall thickness (see graph below), FSi PST coating along the penetration 2mm DFT (L/I 300mm)	E 120 C/U EI 20 C/U
Steel 42-324mm Ø, 16mm wall thickness. 14.2mm wall thickness FSi PST coating along the penetration 2mm DFT (L/I 300mm)	E 120 C/U EI 45 C/U

Appendix UL-EU CERTIFICATE

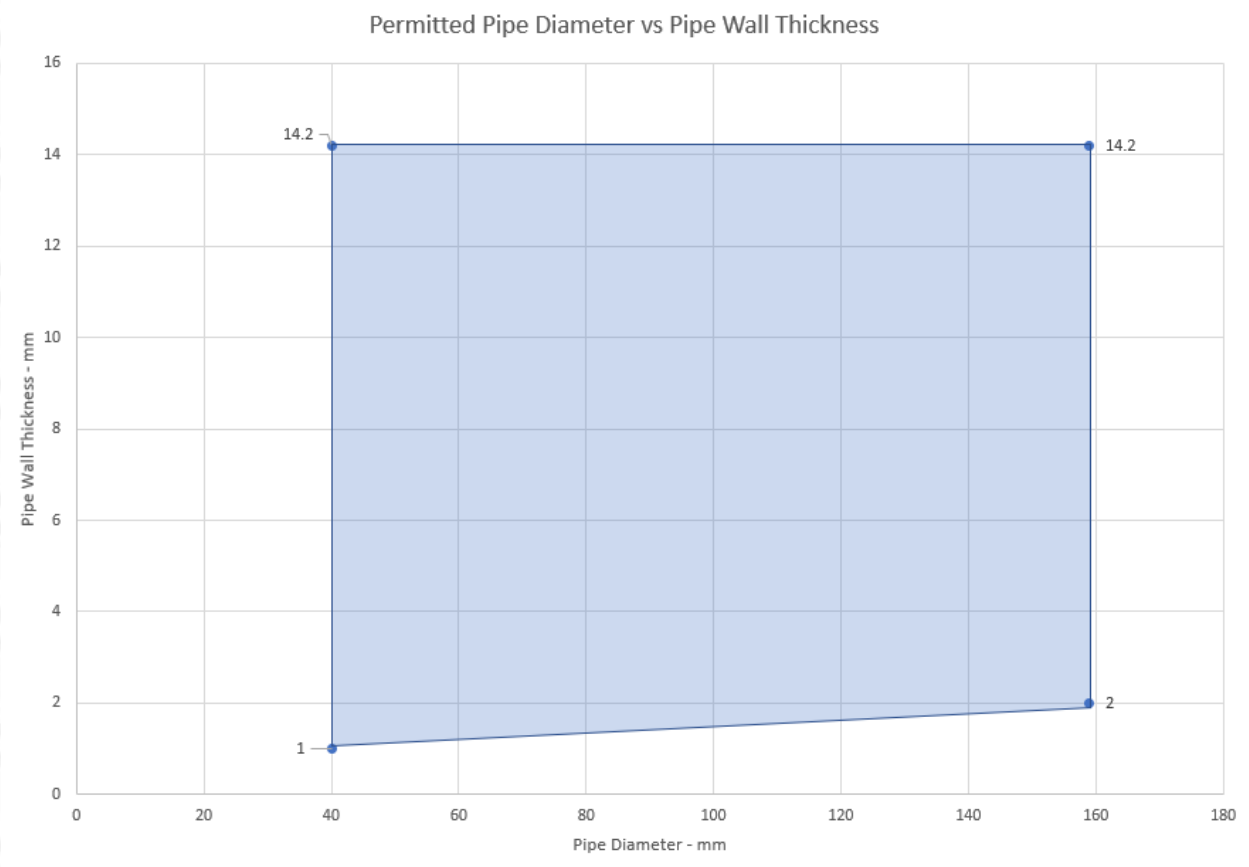

Appendix UL-EU CERTIFICATE

Max Aperture 2600mm Wide x 2600mm High
(Penetrations positioned as per option 1 or 2 below, 0mm distance between services and 50mm to edge of seal)

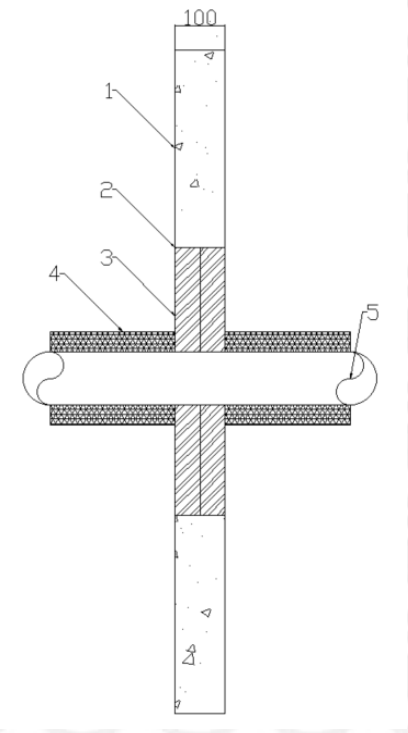

Key
1. Supporting construction
2. Pyrocoustic Sealant
3. Stopseal Batt
4. Insulation
5. Penetration Service

Service(s)	Classification
Steel or Copper Pipe 108mm Ø, 1.5mm – 14.2mm wall thickness 50mm thick foil faced stonewool insulation min. 100kg/m^3 (L/I 500mm)	E 60 C/U EI 45 C/U
Steel or Copper Pipe 108mm Ø, 1.5mm – 14.2mm wall thickness, 50mm thick foil faced stonewool insulation min. 100kg/m^3 (C/I)	EI 60 C/U
Steel or Copper Pipe 42-159mm Ø, 1.0mm – 14.2mm wall thickness (see graph below), 40mm thick foil faced stonewool insulation min. 40kg/m^3 (L/I 400mm)	EI 45 C/U
Steel 42-324mm Ø, 16mm wall thickness. 40mm thick foil faced stonewool insulation min. 40kg/m^3 (L/I 400mm)	EI 45 C/U
Steel or Copper Pipe 42mm Ø, 1.0mm – 14.2mm wall thickness, FSi PST coating along the penetration 2mm DFT (L/I 300mm)	E 60 C/U EI 45 C/U
Steel or Copper Pipe 42-159mm Ø, 1.2mm – 14.2mm wall thickness (see graph below), FSi PST coating along the penetration 2mm DFT (L/I 300mm)	E 60 C/U EI 20 C/U
Steel 42-324mm Ø, 16mm wall thickness. 14.2mm wall thickness FSi PST coating along the penetration 2mm DFT (L/I 400mm)	E 60 C/U EI 45 C/U

Appendix UL-EU CERTIFICATE

Certificate No. UL-EU-00771-CPR
Page 28/157
Date of Issue 2015-04-19

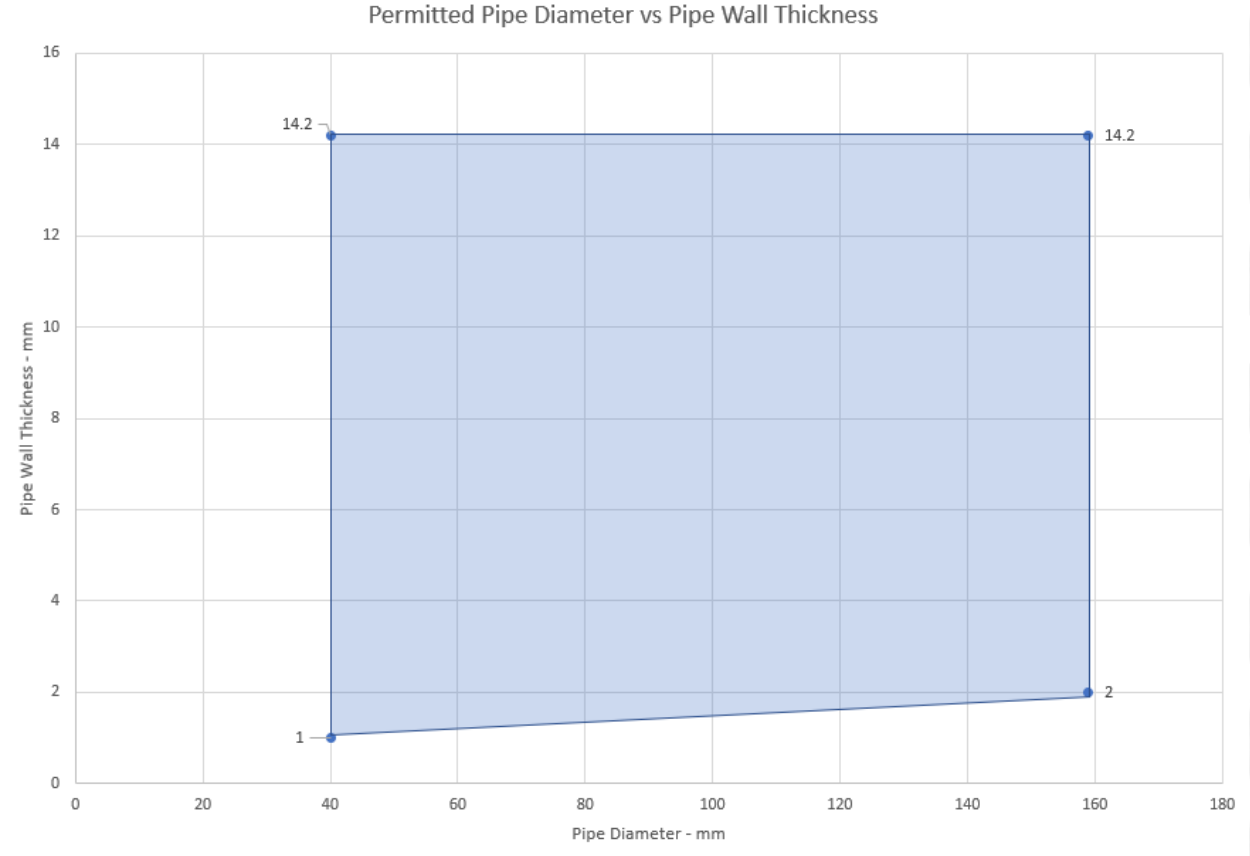

Appendix UL-EU CERTIFICATE

Certificate No. UL-EU-00771-CPR
Page 29/157
Date of Issue 2015-04-19

Max Aperture 750mm Wide x 1200mm High	
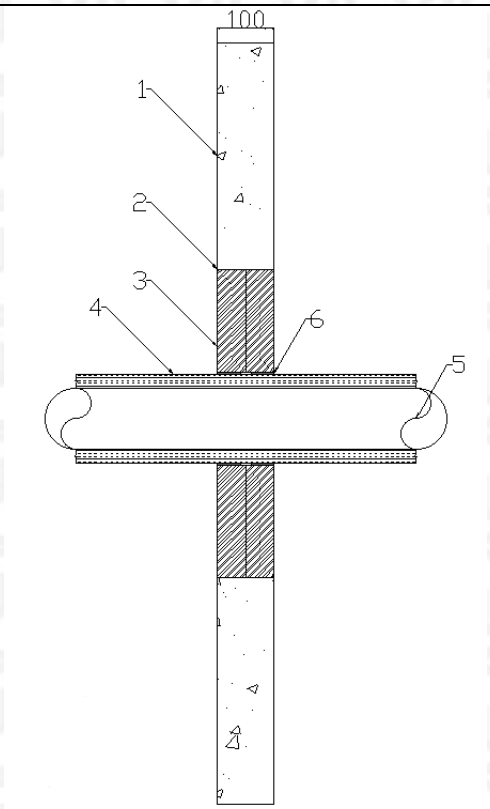	Key 1. Supporting construction 2. Pyrocoustic Sealant 3. Stopseal Batt 4. Insulation 5. Penetration Service 6. PipeBloc EL / PipeBloc PWP
Service(s)	**Classification**
[1]Steel or Copper Pipe 42-159mm Ø, 1.2mm – 14.2mm wall thickness. 13-25mm thick K Flex ST Insulation[2] (C/S)	E 120 C/U EI 60 C/U
[1]Steel or Copper Pipe 42mm Ø, 1 – 14.2mm wall thickness. 25-13mm thick K Flex ST insulation[2] (C/S)	E 120 C/U EI 90 C/U
[1]Steel or Copper Pipe 42-108mm Ø, 1.2 – 14.2mm wall thickness. 25 -40mm thick Kingspan Kooltherm FM insulation[3] (C/S)	E 120 C/U EI 60 C/U
[1]Steel or Copper Pipe 42mm Ø, 1–14.2mm wall thickness. 25 -40mm thick Kingspan Kooltherm FM insulation[3] (C/S)	E 120 C/U EI 90 C/U
[1]Steel or Copper Pipe 42mm Ø, 1.0–14.2mm wall thickness. 50mm thick glassfibre insulation (C/S)	E 120 C/U EI 90 C/U

[1]2 x 2mm thick layers of PipeBloc EL / PipeBloc PWP installed both sides of the Stopseal Fire Batt
[2]Or equivalent elastomeric pipe insulation classified BL – s2, d0 or better to EN 13501-1
[3]Or equivalent Phenloic foam pipe insulation classified BL – s1, d0 or better to EN 13501-1

Appendix UL-EU CERTIFICATE

Max Aperture 2600mm Wide x 2600mm High

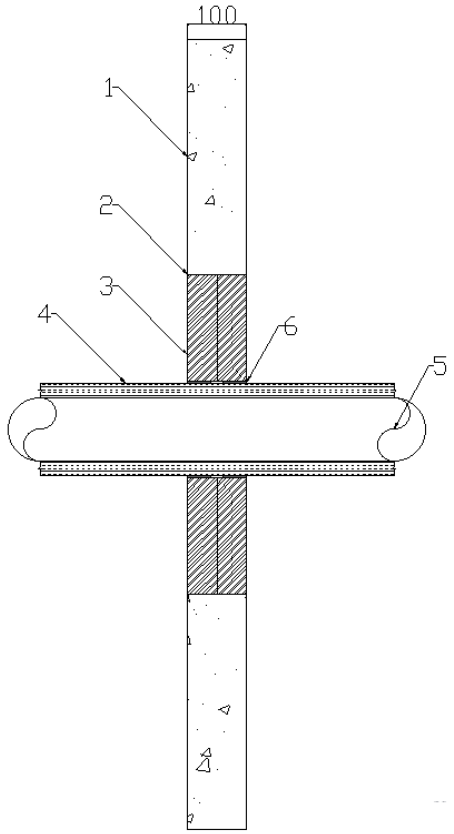

Key
1. Supporting construction
2. Pyrocoustic Sealant
3. Stopseal Batt
4. Insulation
5. Penetration Service
6. PipeBloc EL / PipeBloc PWP

Service(s)	Classification
[1]Steel or Copper Pipe 42-159mm Ø, 1.2mm – 14.2mm wall thickness. 13-25mm thick K Flex ST Insulation[2] (C/S)	EI 60 C/U
[1]Steel or Copper Pipe 42mm Ø, 1 – 14.2mm wall thickness. 25-13mm thick K Flex ST insulation[2] (C/S)	EI 60 C/U
[1]Steel or Copper Pipe 42-108mm Ø, 1.2 – 14.2mm wall thickness. 25 -40mm thick Kingspan Kooltherm FM insulation[3] (C/S)	EI 60 C/U
[1]Steel or Copper Pipe 42mm Ø, 1–14.2mm wall thickness. 25 -40mm thick Kingspan Kooltherm FM insulation[3] (C/S)	EI 60 C/U
[1]Steel or Copper Pipe 42mm Ø, 1.02–14.2mm wall thickness. 50mm thick glassfibre insulation (C/S)	EI 60 C/U

[1]2 x 2mm thick layers of PipeBloc EL / PipeBloc PWP installed both sides of the Stopseal Fire Batt
[2]Or equivalent elastomeric pipe insulation classified BL – s2, d0 or better to EN 13501-1
[3]Or equivalent Phenloic foam pipe insulation classified BL – s1, d0 or better to EN 13501-1

Appendix UL-EU CERTIFICATE

Max Aperture 730mm Wide x 1200mm High	
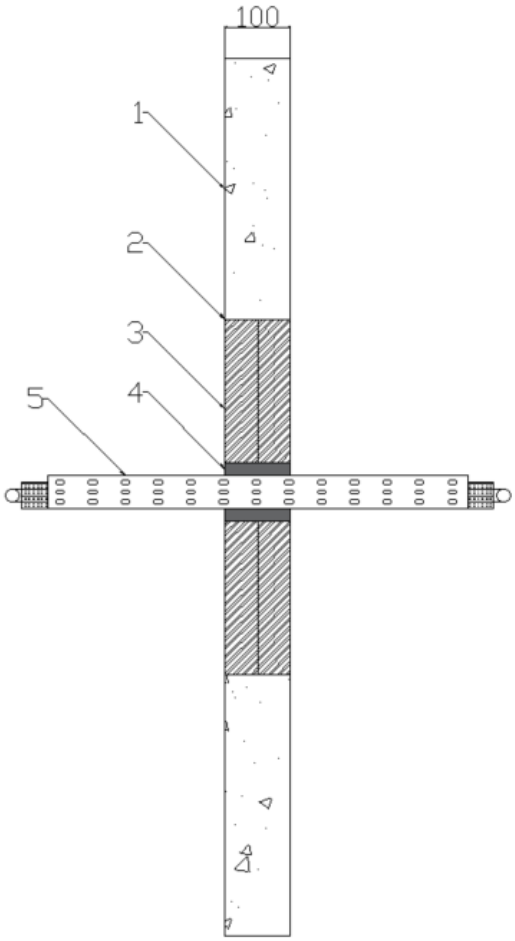	Key 1. Supporting construction 2. Pyrocoustic Sealant 3. Stopseal Batt 4. Pyropro HPE 5. Penetration Service
Service(s)	**Classification**
[1] 6 off Steel or Copper Pipe 22mm Ø, 0.9mm – 14.2mm wall thickness. 19mm thick Armaflex[2] (L/S 400mm)	EI 90 C/U
[1]500mm steel cable tray	E 90 EI 15

[1]Pyropro HPE 20mm annulus full 50mm depth of the Stopseal Coated Batt
[2]Or equivalent elastomeric pipe insulation classified BL – s2, d0 or better to EN 13501-1

Appendix UL-EU CERTIFICATE

Max Aperture 2600mm Wide x 2600mm High	
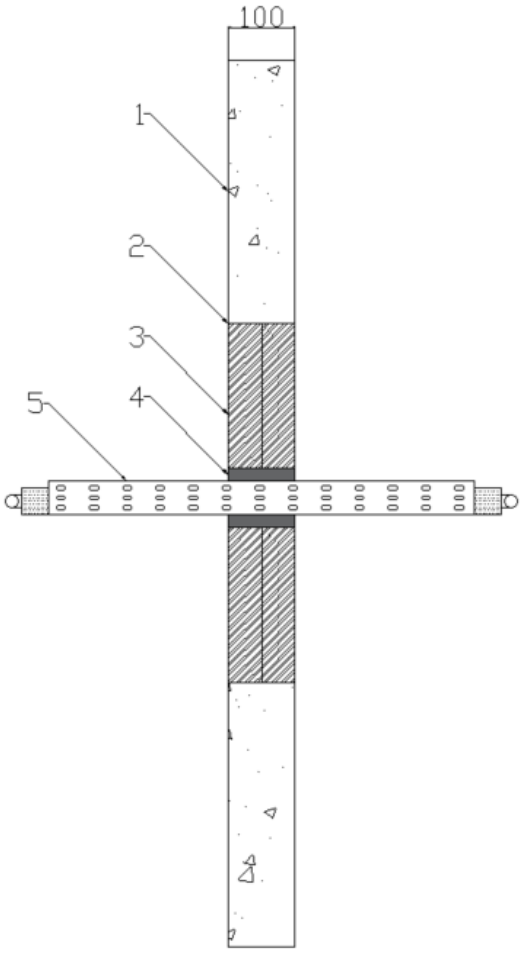	Key 1. Supporting construction 2. Pyrocoustic Sealant 3. Stopseal Batt 4. Pyropro HPE 5. Penetration Service
Service(s)	**Classification**
[1] 6 off Steel or Copper Pipe 22mm Ø, 0.9mm – 14.2mm wall thickness. 19mm thick Armaflex[2] (L/S 400mm)	EI 60 C/U
[1]500mm steel cable tray	E 60 EI 15

[1]Pyropro HPE 20mm annulus full 50mm depth of the Stopseal Coated Batt
[2]Or equivalent elastomeric pipe insulation classified BL – s2, d0 or better to EN 13501-1

Appendix UL-EU CERTIFICATE

Double Layer Stopseal Fire Batt 50mm, Plastic Pipes

Max Aperture 730mm Wide x 1200mm High
(Penetrations positioned as per option 1 or 2 below, 0mm distance between services and 50mm to edge of seal)
Collars secured both faces of the substrate utilising 80mm long steel pig tail screw through to Stopseal Fire Batt

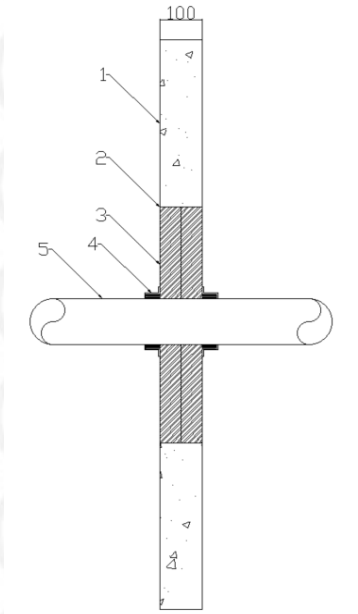

Key
1. Supporting construction
2. Pyrocoustic Sealant
3. Stopseal Batt
4. PipeBloc PCP
5. Penetration Service

Service(s)	PipeBloc PCP Ref	Classification
PVC Pipe 32mm Ø, 1.8mm wall thickness	32mm	EI 120 U/C
PVC Pipe 40mm Ø, 1.8mm wall thickness	40mm	
PVC Pipe 50mm Ø, 1.8mm wall thickness	50mm	
PVC Pipe 55mm Ø, 1.8-2.3mm wall thickness	55mm	
PVC Pipe 63mm Ø, 2.3-3mm wall thickness	63mm	
PVC Pipe 75mm Ø, 3.1-4.8mm wall thickness	75mm	
PVC Pipe 82mm Ø, 3.1-4.8mm wall thickness	82mm	
PVC Pipe 90mm Ø, 4.2-7.4mm wall thickness	90mm	
PVC Pipe 100mm Ø, 4.2-7.4mm wall thickness	100mm	
PVC Pipe 110mm Ø, 4.2-7.4mm wall thickness	110mm	
PVC Pipe 125mm Ø, 6mm wall thickness	125mm	
PVC Pipe 140mm Ø, 6.1-7.5mm wall thickness	140mm	

Appendix UL-EU CERTIFICATE

Max Aperture 2600mm Wide x 2600mm High
(Penetrations positioned as per option 1 or 2 below, 0mm distance between services and 50mm to edge of seal)
Collars secured both faces of the substrate utilising 80mm long steel pig tail screw through to Stopseal Fire Batt

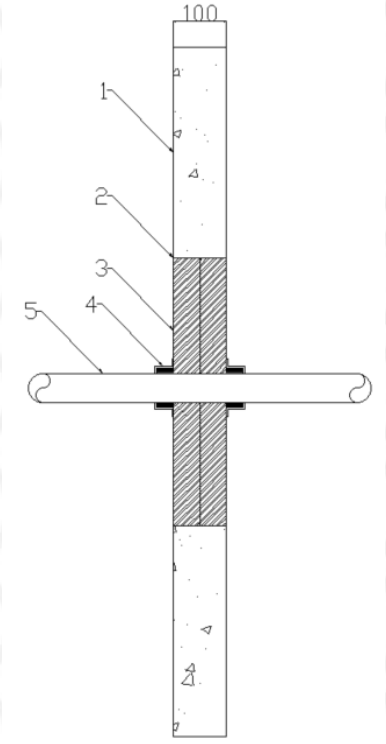

Key
1. Supporting construction
2. Pyrocoustic Sealant
3. Stopseal Batt
4. PipeBloc PCP
5. Penetration Service

Service(s)	PipeBloc PCP Ref	Classification
PVC Pipe 32mm Ø, 1.8mm wall thickness	32mm	EI 60 U/C
PVC Pipe 40mm Ø, 1.8mm wall thickness	40mm	
PVC Pipe 50mm Ø, 1.8mm wall thickness	50mm	
PVC Pipe 55mm Ø, 1.8-2.3mm wall thickness	55mm	
PVC Pipe 63mm Ø, 2.3-3mm wall thickness	63mm	
PVC Pipe 75mm Ø, 3.1-4.8mm wall thickness	75mm	
PVC Pipe 82mm Ø, 3.1-4.8mm wall thickness	82mm	
PVC Pipe 90mm Ø, 4.2-7.4mm wall thickness	90mm	
PVC Pipe 100mm Ø, 4.2-7.4mm wall thickness	100mm	
PVC Pipe 110mm Ø, 4.2-7.4mm wall thickness	110mm	
PVC Pipe 125mm Ø, 6mm wall thickness	125mm	
PVC Pipe 140mm Ø, 6.1-7.5mm wall thickness	140mm	
PVC Pipe 160mm Ø, 6.2-9.5mm wall thickness	160mm	

Appendix UL-EU CERTIFICATE

Max Aperture 730mm Wide x 1200mm High
(Penetrations positioned as per option 1 or 2 below, 0mm distance between services and 50mm to edge of seal)
Collars secured both faces of the substrate utilising 80mm long steel pig tail screw through to Stopseal Fire Batt

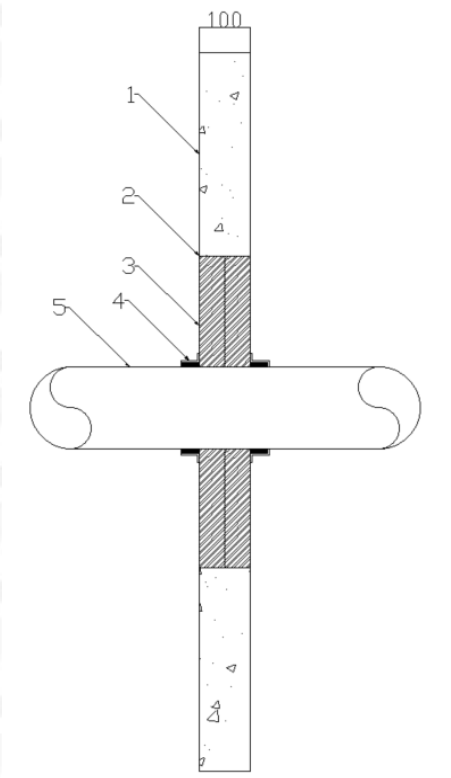

Key
1. Supporting construction
2. Pyrocoustic Sealant
3. Stopseal Batt
4. PipeBloc PCP
5. Penetration Service

Service(s)	PipeBloc PCP Ref	Classification
PP Pipe 32mm Ø, 2.9mm wall thickness	32mm	EI 120 U/C
PP Pipe 40mm Ø, 2.9mm wall thickness	40mm	
PP Pipe 50mm Ø, 2.9mm wall thickness	50mm	
PP Pipe 55mm Ø, 2.9-4.4mm wall thickness	55mm	
PP Pipe 63mm Ø, 2.9-4.4mm wall thickness	63mm	
PP Pipe 75mm Ø, 2.8-6.7mm wall thickness	75mm	
PP Pipe 82mm Ø, 2.8-6.7mm wall thickness	82mm	
PP Pipe 90mm Ø, 2.7-10mm wall thickness	90mm	
PP Pipe 100mm Ø, 2.7-10mm wall thickness	100mm	
PP Pipe 110mm Ø, 2.7-10mm wall thickness	110mm	
PP Pipe 125mm Ø, 3.1mm wall thickness	125mm	
PP Pipe 140mm Ø, 3.5-8mm wall thickness	140mm	
PP Pipe 160mm Ø, 4-14.6mm wall thickness	160mm	

Appendix UL-EU CERTIFICATE

Max Aperture 2600mm Wide x 2600mm High
(Penetrations positioned as per option 1 or 2 below, 0mm distance between services and 50mm to edge of seal)
Collars secured both faces of the substrate utilising 80mm long steel pig tail screw through to Stopseal Fire Batt

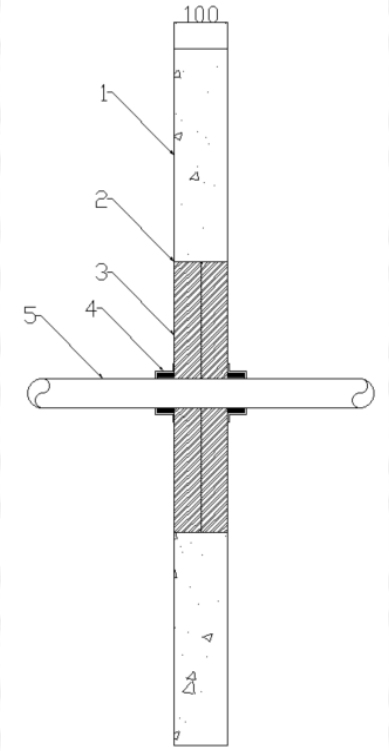

Key
1. Supporting construction
2. Pyrocoustic Sealant
3. Stopseal Batt
4. PipeBloc PCP
5. Penetration Service

Service(s)	PipeBloc PCP Ref	Classification
PP Pipe 32mm Ø, 2.9mm wall thickness	32mm	EI 60 U/C
PP Pipe 40mm Ø, 2.9mm wall thickness	40mm	
PP Pipe 50mm Ø, 2.9mm wall thickness	50mm	
PP Pipe 55mm Ø, 2.9-4.4mm wall thickness	55mm	
PP Pipe 63mm Ø, 2.9-4.4mm wall thickness	63mm	
PP Pipe 75mm Ø, 2.8-6.7mm wall thickness	75mm	
PP Pipe 82mm Ø, 2.8-6.7mm wall thickness	82mm	
PP Pipe 90mm Ø, 2.7-10mm wall thickness	90mm	
PP Pipe 100mm Ø, 2.7-10mm wall thickness	100mm	
PP Pipe 110mm Ø, 2.7-10mm wall thickness	110mm	
PP Pipe 125mm Ø, 3.1mm wall thickness	125mm	
PP Pipe 140mm Ø, 3.5-8mm wall thickness	140mm	
PP Pipe 160mm Ø, 4-14.6mm wall thickness	160mm	

Appendix UL-EU CERTIFICATE

Max Aperture 730mm Wide x 1200mm High
(Penetrations positioned as per option 1 or 2 below, 0mm distance between services and 50mm to edge of seal)
Collars secured both faces of the substrate utilising 80mm long steel pig tail screw through to Stopseal Fire Batt

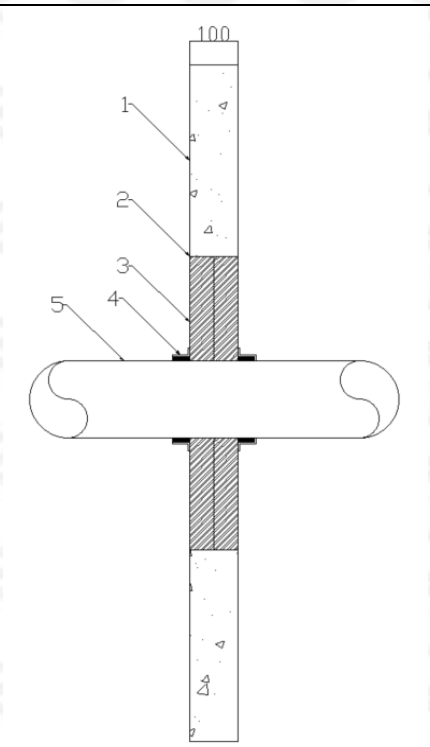

Key
1. Supporting construction
2. Pyrocoustic Sealant
3. Stopseal Batt
4. PipeBloc PCP
5. Penetration Service

Service(s)	PipeBloc PCP Ref	Classification
PE Pipe 32mm Ø, 2.9mm wall thickness	32mm	EI 120 U/C
PE Pipe 40mm Ø, 2.9mm wall thickness	40mm	
PE Pipe 50mm Ø, 2.9mm wall thickness	50mm	
PE Pipe 55mm Ø, 2.9-4.4mm wall thickness	55mm	
PE Pipe 63mm Ø, 2.9-4.4mm wall thickness	63mm	
PE Pipe 75mm Ø, 2.8-6.7mm wall thickness	75mm	
PE Pipe 82mm Ø, 2.8-6.7mm wall thickness	82mm	
PE Pipe 90mm Ø, 2.7-10mm wall thickness	90mm	
PE Pipe 100mm Ø, 2.7-10mm wall thickness	100mm	
PE Pipe 110mm Ø, 2.7-10mm wall thickness	110mm	
PE Pipe 125mm Ø, 3.1mm wall thickness	125mm	
PE Pipe 140mm Ø, 3.9-5.8mm wall thickness	140mm	
PE Pipe 160mm Ø, 4.9-9.5mm wall thickness	160mm	

Appendix UL-EU CERTIFICATE

Max Aperture 2600mm Wide x 2600mm High
(Penetrations positioned as per option 1 or 2 below, 0mm distance between services and 50mm to edge of seal)
Collars secured both faces of the substrate utilising 80mm long steel pig tail screw through to Stopseal Fire Batt

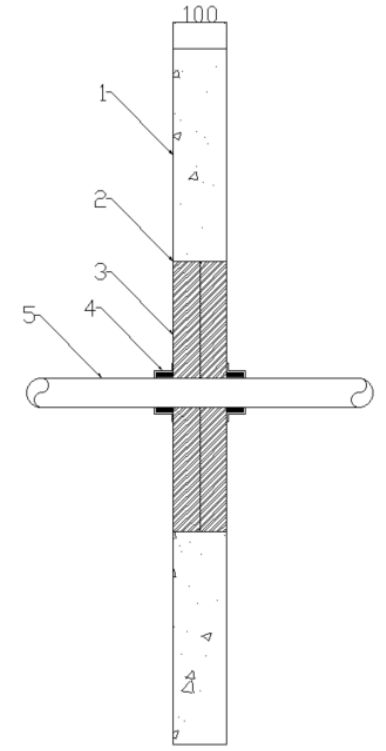

Key
1. Supporting construction
2. Pyrocoustic Sealant
3. Stopseal Batt
4. PipeBloc PCP
5. Penetration Service

Service(s)	PipeBloc PCP Ref	Classification
PE Pipe 32mm Ø, 2.9mm wall thickness	32mm	EI 60 U/C
PE Pipe 40mm Ø, 2.9mm wall thickness	40mm	
PE Pipe 50mm Ø, 2.9mm wall thickness	50mm	
PE Pipe 55mm Ø, 2.9-4.4mm wall thickness	55mm	
PE Pipe 63mm Ø, 2.9-4.4mm wall thickness	63mm	
PE Pipe 75mm Ø, 2.8-6.7mm wall thickness	75mm	
PE Pipe 82mm Ø, 2.8-6.7mm wall thickness	82mm	
PE Pipe 90mm Ø, 2.7-10mm wall thickness	90mm	
PE Pipe 100mm Ø, 2.7-10mm wall thickness	100mm	
PE Pipe 110mm Ø, 2.7-10mm wall thickness	110mm	
PE Pipe 125mm Ø, 3.1mm wall thickness	125mm	
PE Pipe 140mm Ø, 3.9-5.8mm wall thickness	140mm	
PE Pipe 160mm Ø, 4.9-9.5mm wall thickness	160mm	

Appendix UL-EU CERTIFICATE

Double Layer Stopseal Fire Batt 50mm, Insulated Plastic Pipes

Max Aperture 730mm Wide x 1200mm High
(Penetrations positioned as per option 1 or 2 below, 100mm distance between services and 50mm to edge of seal)

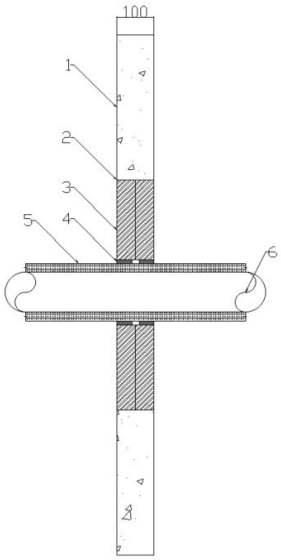

Key
1. Supporting construction
2. Pyrocoustic Sealant
3. Stopseal Batt
4. PipeBloc EL / PipeBloc PWP
5. Insulation
6. Penetration Service

Service(s)	PipeBloc EL / PipeBloc PWP Ref	Classification
PVC Pipe 40mm Ø, 1.9mm wall thickness. 25 mm thick Kingspan Kooltherm FM[3] insulation (C/S)	3 x 2mm thickness	E 120 U/C EI 90 U/C
PVC Pipe 40mm Ø, 3mm wall thickness. 15 mm thick Kingspan Kooltherm FM[3] insulation (C/S)	3 x 2mm thickness	
PVC Pipe 110mm Ø, 4.2mm wall thickness. 25 mm thick Kingspan Kooltherm FM[3] insulation (C/S)	5 x 2mm thickness	EI 120 U/C
PVC Pipe 110mm Ø, 6.6mm wall thickness. 20 mm thick Kingspan Kooltherm FM[3] insulation (C/S)	5 x 2mm thickness	E 120 U/C EI 90 U/C
PVC Pipe 40mm Ø, 1.9mm wall thickness. 32 mm thick Armacell Armaflex Class O[2] (C/S)	3 x 2mm thickness	E 120 U/C EI 90 U/C
PVC Pipe 40mm Ø, 3mm wall thickness. 9 mm thick Armacell Armaflex Class O[2] (C/S)	3 x 2mm thickness	
PVC Pipe 110mm Ø, 4.2mm wall thickness. 32 mm thick Armacell Armaflex Class O[2] (C/S)	5 x 2mm thickness	EI 120 U/C
PVC Pipe 110mm Ø, 6.6mm wall thickness. 13 mm thick Armacell Armaflex Class O[2] (C/S)	5 x 2mm thickness	E 120 U/C EI 90 U/C

[1]PipeBloc EL / PipeBloc PWP secured internally within both faces of the Stopseal Fire Batt
[2]Or equivalent elastomeric pipe insulation classified BL – s2, d0 or better to EN 13501-1
[3]Or equivalent Phenloic foam pipe insulation classified BL – s1, d0 or better to EN 13501-1

Appendix UL-EU CERTIFICATE

Max Aperture 2600mm Wide x 2600mm High
(Penetrations positioned as per option 1 or 2 below, 100mm distance between services and 50mm to edge of seal)

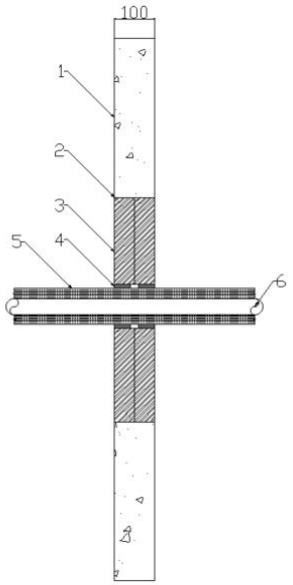

Key
1. Supporting construction
2. Pyrocoustic Sealant
3. Stopseal Batt
4. PipeBloc EL / PipeBloc PWP
5. Insulation
6. Penetration Service

Service(s)	PipeBloc EL / PipeBloc PWP Ref	Classification
PVC Pipe 40mm Ø, 1.9mm wall thickness. 25 mm thick Kingspan Kooltherm FM insulation[3] (C/S)	3 x 2mm thickness	EI 60 U/C
PVC Pipe 40mm Ø, 3mm wall thickness. 15 mm thick Kingspan Kooltherm FM[3] insulation (C/S)	3 x 2mm thickness	
PVC Pipe 110mm Ø, 4.2mm wall thickness. 25 mm thick Kingspan Kooltherm FM[3] insulation (C/S)	5 x 2mm thickness	EI 60 U/C
PVC Pipe 110mm Ø, 6.6mm wall thickness. 20 mm thick Kingspan Kooltherm FM[3] insulation (C/S)	5 x 2mm thickness	EI 60 U/C
PVC Pipe 40mm Ø, 1.9mm wall thickness. 32 mm thick Armacell Armaflex Class O[2] (C/S)	3 x 2mm thickness	EI 60 U/C
PVC Pipe 40mm Ø, 3mm wall thickness. 9 mm thick Armacell Armaflex Class O[2] (C/S)	3 x 2mm thickness	
PVC Pipe 110mm Ø, 4.2mm wall thickness. 32 mm thick Armacell Armaflex Class O[2] (C/S)	5 x 2mm thickness	EI 60 U/C
PVC Pipe 110mm Ø, 6.6mm wall thickness. 13 mm thick Armacell Armaflex Class O[2] (C/S)	5 x 2mm thickness	EI 60 U/C

[1]PipeBloc EL / PipeBloc PWP secured internally within both faces of the Stopseal Fire Batt
[2]Or equivalent elastomeric pipe insulation classified BL – s2, d0 or better to EN 13501-1
[3]Or equivalent Phenloic foam pipe insulation classified BL – s1, d0 or better to EN 13501-1

Appendix UL-EU CERTIFICATE

Certificate No. UL-EU-00771-CPR
Page 41/157
Date of Issue 2015-04-19

Single Layer Patress, Stopseal Fire Batt 50mm, Electrical Cables and Conduits

Max Aperture 750mm Wide x 1200mm High	
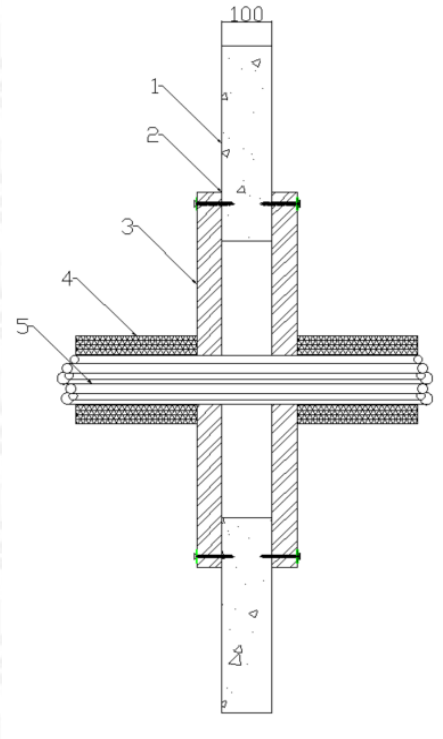	Key 1. Supporting construction 2. Pyrocoustic Sealant 3. Stopseal Batt 4. Insulation 5. Penetration Service
Service(s)	**Classification**
[2]Electrical cables upto 80mm Ø	EI 120
[2]Cable Trays and Ladders	
[2]100 mm diameter bundle telecommunication cable type "F"	
[2]Unsheathed electrical cables up to 24mm Ø	
[2]Steel or Copper Conduits up to 16mm Ø	
[2]Plastic conduits up to 16mm Ø	

[1]Patress installation of Stopseal Coated Batt. The Batts are installed in horizontal rows and fixed in minimum two vertical edges. Overlap of batts to substrate min 100mm. Batts mechanically fixed to substrate with min 6mm x 80mm steel screws and steel retaining washer. Fixings installed at max 300mm centres
[2]Cables and cable trays wrapped with a single layer of 40mm thick, 40kg/m^3 Stonewool (L/I 300mm)

Appendix UL-EU CERTIFICATE

Max Aperture 2600mm Wide x 2600mm High	
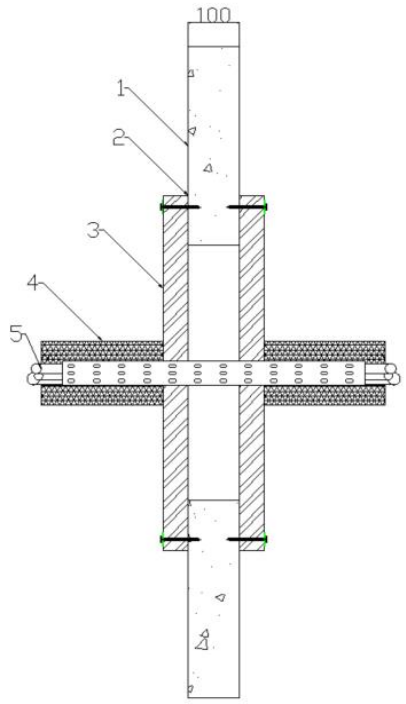	Key 1. Supporting construction 2. Pyrocoustic Sealant 3. Stopseal Batt 4. Insulation 5. Penetration Service
Service(s)	**Classification**
[2]Electrical cables upto 80mm Ø	EI 60
[2]Cable Trays and Ladders	
[2]100 mm diameter bundle telecommunication cable type "F"	
[2]Unsheathed electrical cables up to 24mm Ø	
[2]Steel or Copper Conduits up to 16mm Ø	
[2]Plastic conduits up to 16mm Ø	

[1]Patress installation of Stopseal Coated Batt. The Batts are installed in horizontal rows and fixed in minimum two vertical edges. Overlap of batts to substrate min 100mm. Batts mechanically fixed to substrate with min 6mm x 80mm steel screws and steel retaining washer. Fixings installed at max 300mm centres
[2]Cables and cable trays wrapped with a single layer of 40mm thick, 40kg/m^3 Stonewool (L/I 300mm)

Appendix UL-EU CERTIFICATE

Single Layer Patress, Stopseal Fire Batt 50mm, Insulated Metallic Pipes

Max Aperture 750mm Wide x 1200mm High	
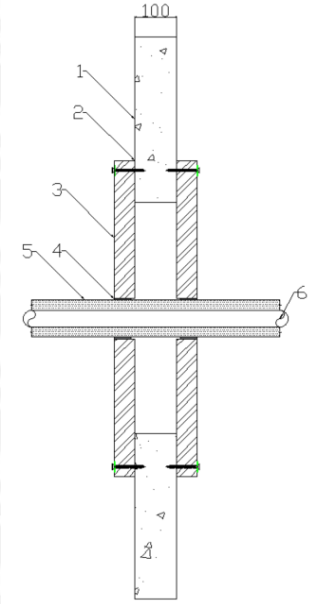	Key 1. Supporting construction 2. Pyrocoustic Sealant 3. Stopseal Batt 4. PipeBloc EL / PipeBloc PWP 5. Insulation 6. Penetration Service
Service(s)	**Classification**
[2]Steel or Copper Pipe 42-159mm Ø, 1.2mm – 14.2mm wall thickness. 13-25mm thick K Flex ST Insulation[3] (C/S)	E 120 C/U EI 60 C/U
[2]Steel or Copper Pipe 42-159mm Ø, 1.2 – 14.2mm wall thickness. 25mm thick K Flex ST insulation[3] (C/S)	E 120 C/U EI 90 C/U
[2]Steel or Copper Pipe 42mm Ø, 1 – 14.2mm wall thickness. 25-13mm thick K Flex ST insulation[3] (C/S)	EI 120 C/U
[2]Steel or Copper Pipe 42-108mm Ø, 1.2 – 14.2mm wall thickness. 25 -40mm thick Kingspan Kooltherm FM insulation[4] (C/S)	E 120 C/U EI 90 C/U
[2]Steel or Copper Pipe 42mm Ø, 1–14.2mm wall thickness. 25 -40mm thick Kingspan Kooltherm FM insulation[4] (C/S)	EI 120 C/U
[2]Steel or Copper Pipe 42mm Ø, 1.2–14.2mm wall thickness. 50mm thick glassfibre insulation min. 30kg/m^3 (C/S)	E 120 C/U EI 90 C/U

[1]Patress installation of Stopseal Coated Batt. The Batts are installed in horizontal rows and fixed in minimum two vertical edges. Overlap of batts to substrate min 100mm. Batts mechanically fixed to substrate with min 6mm x 80mm steel screws and steel retaining washer. Fixings installed at max 300mm centres.
[2]2 x 2mm thick layers of PipeBloc EL / PipeBloc PWP installed both sides of the substrate within the patress installation
[3]Or equivalent elastomeric pipe insulation classified BL – s2, d0 or better to EN 13501-1
[4]Or equivalent Phenloic foam pipe insulation classified BL – s1, d0 or better to EN 13501-1

Appendix UL-EU CERTIFICATE

Certificate No. UL-EU-00771-CPR
Page 44/157
Date of Issue 2015-04-19

Max Aperture 2600mm Wide x 2600mm High	
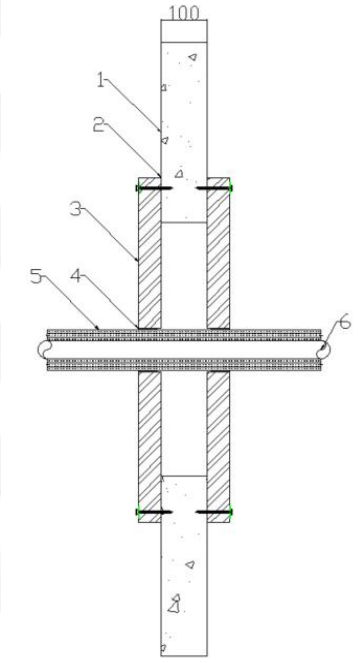	Key 1. Supporting construction 2. Pyrocoustic Sealant 3. Stopseal Batt 4. PipeBloc EL / PipeBloc PWP 5. Insulation 6. Penetration Service
Service(s)	**Classification**
[2]Steel or Copper Pipe 42-159mm Ø, 1.2mm – 14.2mm wall thickness. 13-25mm thick K Flex ST[3] Insulation (C/S)	EI 60 C/U
[2]Steel or Copper Pipe 42-159mm Ø, 1.2 – 14.2mm wall thickness. 25mm thick K Flex ST[3] insulation (C/S)	
[2]Steel or Copper Pipe 42mm Ø, 1 – 14.2mm wall thickness. 25-13mm thick K Flex ST[3] insulation (C/S)	
[2]Steel or Copper Pipe 42-108mm Ø, 1.2 – 14.2mm wall thickness. 25 -40mm thick Kingspan Kooltherm FM[4] insulation (C/S)	
[2]Steel or Copper Pipe 42mm Ø, 1–14.2mm wall thickness. 25 -40mm thick Kingspan Kooltherm FM[4] insulation (C/S)	
[2]Steel or Copper Pipe 42mm Ø, 1.2–14.2mm wall thickness. 50mm thick glassfibre insulation min. 30kg/m[3] (C/S)	

[1]Patress installation of Stopseal Coated Batt. The Batts are installed in horizontal rows and fixed in minimum two vertical edges. Overlap of batts to substrate min 100mm. Batts mechanically fixed to substrate with min 6mm x 80mm steel screws and steel retaining washer. Fixings installed at max 300mm centres.
[2]2 x 2mm thick layers of PipeBloc EL / PipeBloc PWP installed both sides of the substrate within the patress installation
[3]Or equivalent elastomeric pipe insulation classified BL – s2, d0 or better to EN 13501-1
[4]Or equivalent Phenloic foam pipe insulation classified BL – s1, d0 or better to EN 13501-1

Appendix UL-EU CERTIFICATE

Max Aperture 750mm Wide x 1200mm High	
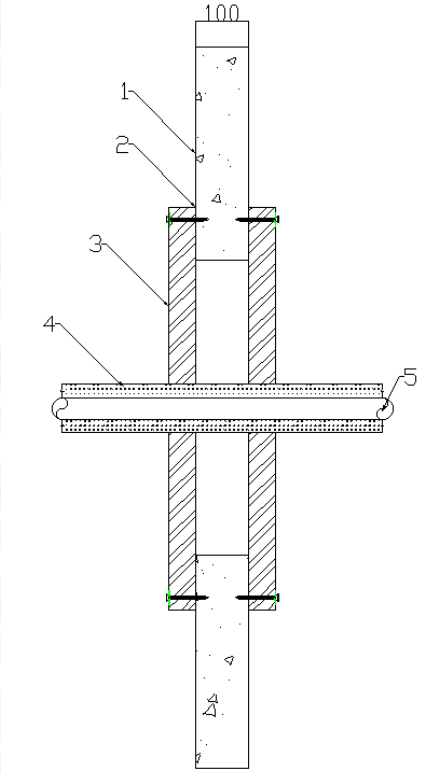	Key 1. Supporting construction 2. Pyrocoustic Sealant 3. Stopseal Batt 4. Insulation 5. Penetration Service
Service(s)	**Classification**
Steel or Copper Pipe 42-159mm Ø, 1.0mm – 14.2mm wall thickness (see graph below). 25mm thick foil faced glassfibre insulation min. 30kg/m^3 (C/S)	E 120 C/U EI 90 C/U
Steel or Copper Pipe 42mm Ø, 1mm – 14.2mm wall thickness. 25mm thick foil faced glassfibre insulation min. 30kg/m^3 (C/S)	EI 120 C/U

[1]Patress installation of Stopseal Coated Batt. The Batts are installed in horizontal rows and fixed in minimum two vertical edges. Overlap of batts to substrate min 100mm. Batts mechanically fixed to substrate with min 6mm x 80mm steel screws and steel retaining washer. Fixings installed at max 300mm centres.

Appendix UL-EU CERTIFICATE

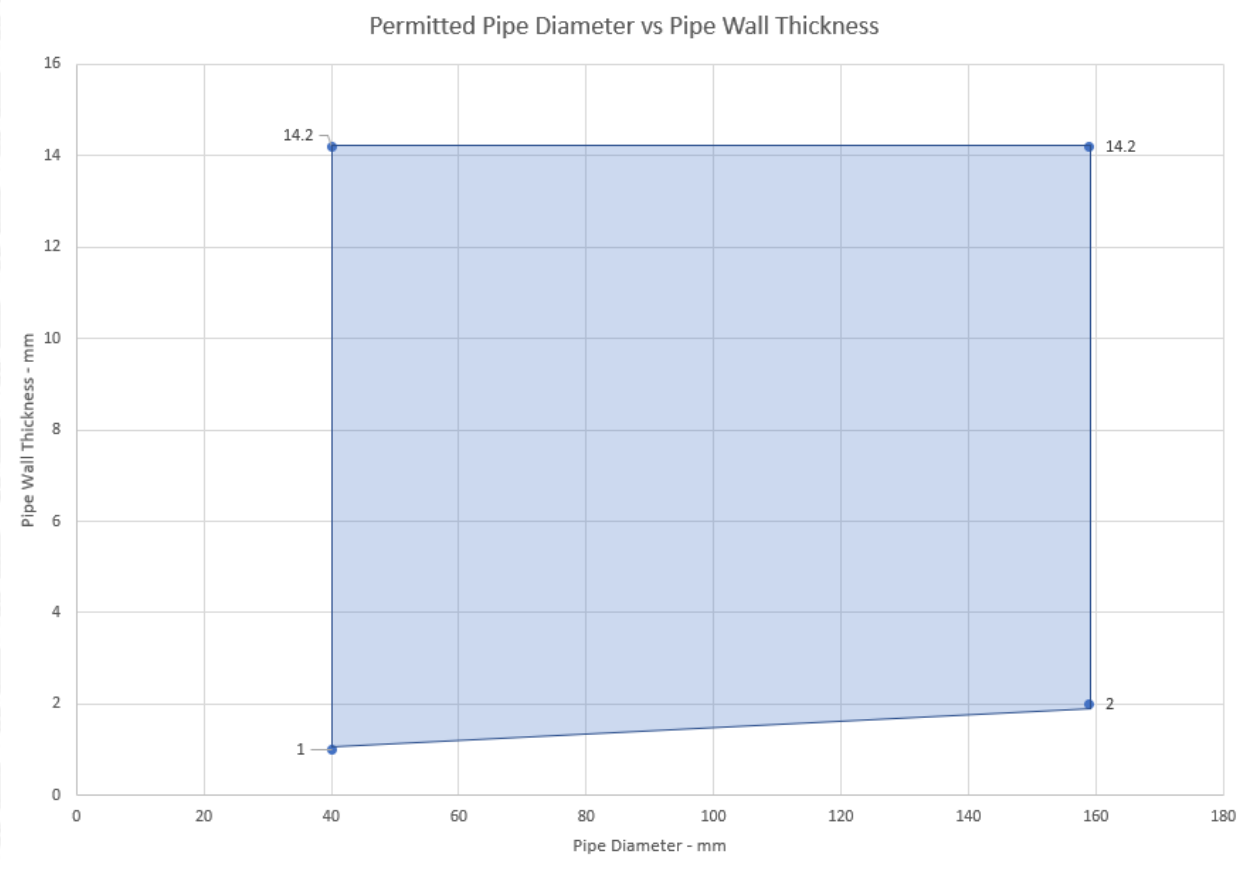

Appendix UL-EU CERTIFICATE

Certificate No. UL-EU-00771-CPR
Page 47/157
Date of Issue 2015-04-19

Max Aperture 2600mm Wide x 2600mm High	
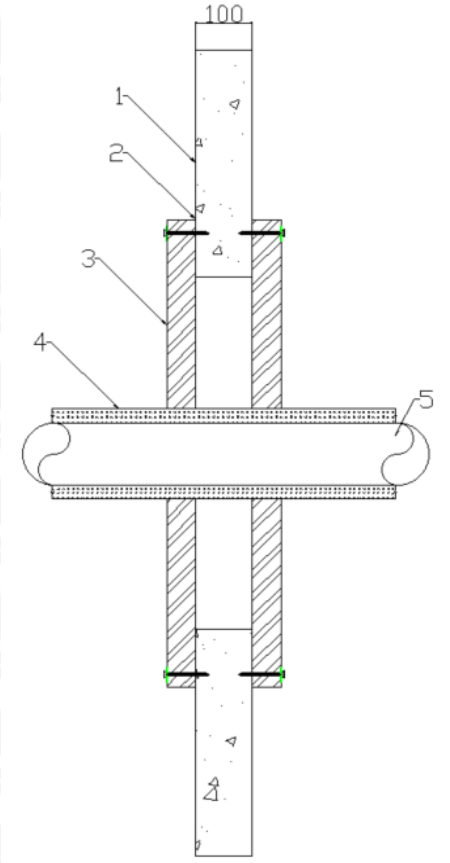	Key 1. Supporting construction 2. Pyrocoustic Sealant 3. Stopseal Batt 4. Insulation 5. Penetration Service
Service(s)	**Classification**
Steel or Copper Pipe 42-159mm Ø, 1.0mm – 14.2mm wall thickness (see graph below). 25mm thick foil faced glassfibre insulation min. 30kg/m^3 (C/S)	EI 60 C/U
Steel or Copper Pipe 42mm Ø, 1mm – 14.2mm wall thickness. 25mm thick foil faced glassfibre insulation min. 30kg/m^3 (C/S)	EI 60 C/U

[1]Patress installation of Stopseal Coated Batt. The Batts are installed in horizontal rows and fixed in minimum two vertical edges. Overlap of batts to substrate min 100mm. Batts mechanically fixed to substrate with min 6mm x 80mm steel screws and steel retaining washer. Fixings installed at max 300mm centres.

Appendix UL-EU CERTIFICATE

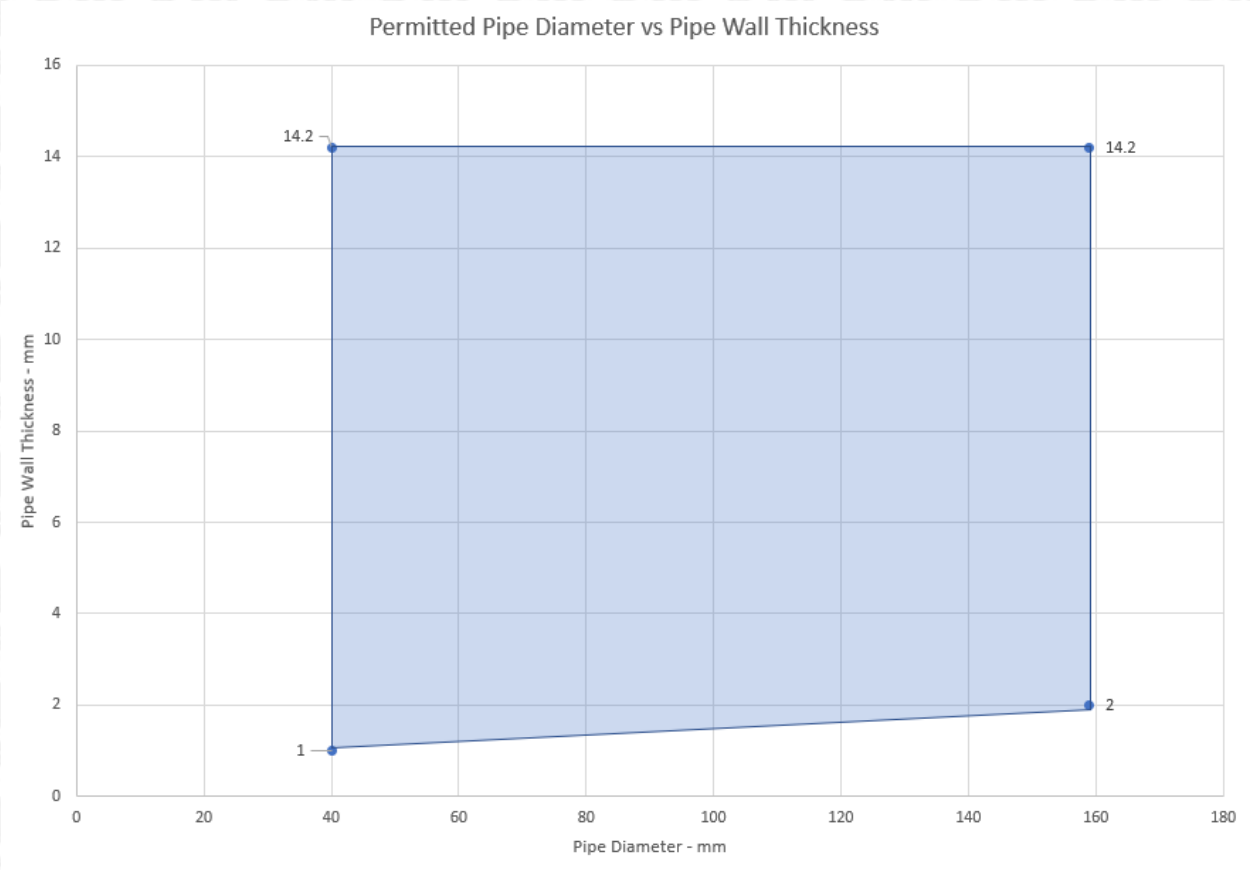

Appendix UL-EU CERTIFICATE

Single Layer Patress, Stopseal Fire Batt 50mm, Plastic Pipes

Max Aperture 730mm Wide x 1200mm High
(Penetrations positioned as per option 1 or 2 below, 0mm distance between services and 50mm to edge of seal)

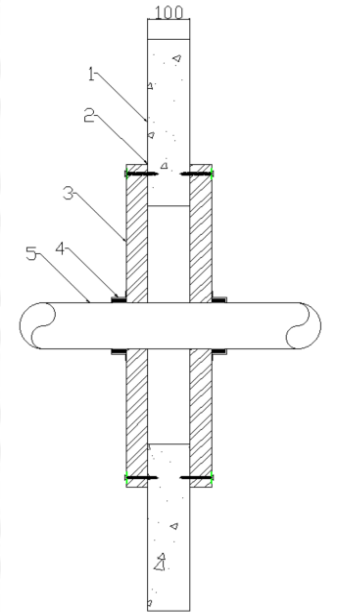

Key
1. Supporting construction
2. Pyrocoustic Sealant
3. Stopseal Batt
4. PipeBloc PCP
5. Penetration Service

Service(s)	PipeBloc PCP Ref	Classification
PVC Pipe 32mm Ø, 1.8mm wall thickness	32mm	EI 120 U/C
PVC Pipe 40mm Ø, 1.8mm wall thickness	40mm	
PVC Pipe 50mm Ø, 1.8mm wall thickness	50mm	
PVC Pipe 55mm Ø, 1.8-2.3mm wall thickness	55mm	
PVC Pipe 63mm Ø, 2.3-3mm wall thickness	63mm	
PVC Pipe 75mm Ø, 3.1-4.8mm wall thickness	75mm	
PVC Pipe 82mm Ø, 3.1-4.8mm wall thickness	82mm	
PVC Pipe 90mm Ø, 4.2-7.4mm wall thickness	90mm	
PVC Pipe 100mm Ø, 4.2-7.4mm wall thickness	100mm	
PVC Pipe 110mm Ø, 4.2-7.4mm wall thickness	110mm	
PVC Pipe 125mm Ø, 6mm wall thickness	125mm	
PVC Pipe 140mm Ø, 6.1-7.5mm wall thickness	140mm	
PVC Pipe 160mm Ø, 6.2-9.5mm wall thickness	160mm	

[1]Patress installation of Stopseal Coated Batt. The Batts are installed in horizontal rows and fixed in minimum two vertical edges. Overlap of batts to substrate min 100mm. Batts mechanically fixed to substrate with min 6mm x 80mm steel screws and steel retaining washer. Fixings installed at max 300mm centres.
Collars secured both faces of the substrate utlising 80mm long pig tail screw through to the Stopseal Fire Batt

Appendix UL-EU CERTIFICATE

Max Aperture 2600mm Wide x 2600mm High
(Penetrations positioned as per option 1 or 2 below, 0mm distance between services and 50mm to edge of seal)

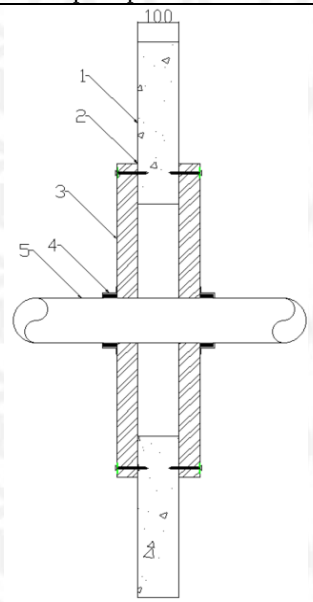

Key
1. Supporting construction
2. Pyrocoustic Sealant
3. Stopseal Batt
4. PipeBloc PCP
5. Penetration Service

Service(s)	PipeBloc PCP Ref	Classification
PVC Pipe 32mm Ø, 1.8mm wall thickness	32mm	EI 60 U/C
PVC Pipe 40mm Ø, 1.8mm wall thickness	40mm	
PVC Pipe 50mm Ø, 1.8mm wall thickness	50mm	
PVC Pipe 55mm Ø, 1.8-2.3mm wall thickness	55mm	
PVC Pipe 63mm Ø, 2.3-3mm wall thickness	63mm	
PVC Pipe 75mm Ø, 3.1-4.8mm wall thickness	75mm	
PVC Pipe 82mm Ø, 3.1-4.8mm wall thickness	82mm	
PVC Pipe 90mm Ø, 4.2-7.4mm wall thickness	90mm	
PVC Pipe 100mm Ø, 4.2-7.4mm wall thickness	100mm	
PVC Pipe 110mm Ø, 4.2-7.4mm wall thickness	110mm	
PVC Pipe 125mm Ø, 6mm wall thickness	125mm	
PVC Pipe 140mm Ø, 6.1-7.5mm wall thickness	140mm	
PVC Pipe 160mm Ø, 6.2-9.5mm wall thickness	160mm	

[1]Patress installation of Stopseal Coated Batt. The Batts are installed in horizontal rows and fixed in minimum two vertical edges. Overlap of batts to substrate min 100mm. Batts mechanically fixed to substrate with min 6mm x 80mm steel screws and steel retaining washer. Fixings installed at max 300mm centres.
Collars secured both faces of the substrate utlising 80mm long pig tail screw through to the Stopseal Fire Batt

Appendix UL-EU CERTIFICATE

Max Aperture 730mm Wide x 1200mm High
(Penetrations positioned as per option 1 or 2 below, 0mm distance between services and 50mm to edge of seal)

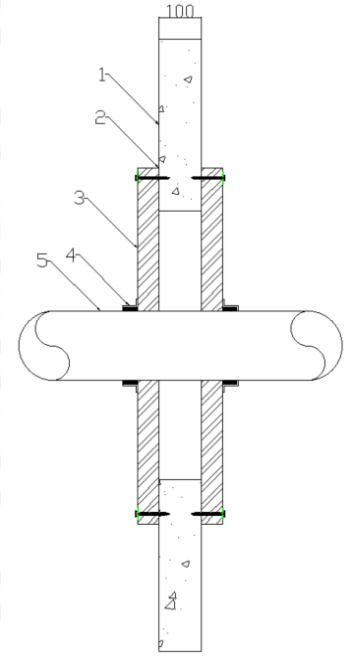

Key
1. Supporting construction
2. Pyrocoustic Sealant
3. Stopseal Batt
4. PipeBloc PCP
5. Penetration Service

Service(s)	PipeBloc PCP Ref	Classification
PP Pipe 32mm Ø, 2.9mm wall thickness	32mm	EI 120 U/C
PP Pipe 40mm Ø, 2.9mm wall thickness	40mm	
PP Pipe 50mm Ø, 2.9mm wall thickness	50mm	
PP Pipe 55mm Ø, 2.9-4.4mm wall thickness	55mm	
PP Pipe 63mm Ø, 2.9-4.4mm wall thickness	63mm	
PP Pipe 75mm Ø, 2.8-6.7mm wall thickness	75mm	
PP Pipe 82mm Ø, 2.8-6.7mm wall thickness	82mm	
PP Pipe 90mm Ø, 2.7-10mm wall thickness	90mm	
PP Pipe 100mm Ø, 2.7-10mm wall thickness	100mm	
PP Pipe 110mm Ø, 2.7-10mm wall thickness	110mm	
PP Pipe 125mm Ø, 3.1mm wall thickness	125mm	
PP Pipe 140mm Ø, 3.5-8mm wall thickness	140mm	
PP Pipe 160mm Ø, 4-14.6mm wall thickness	160mm	

[1]Patress installation of Stopseal Coated Batt. The Batts are installed in horizontal rows and fixed in minimum two vertical edges. Overlap of batts to substrate min 100mm. Batts mechanically fixed to substrate with min 6mm x 80mm steel screws and steel retaining washer. Fixings installed at max 300mm centres.
Collars secured both faces of the substrate utlising 80mm long pig tail screw through to the Stopseal Fire Batt

Appendix UL-EU CERTIFICATE

Max Aperture 2600mm Wide x 2600mm High
(Penetrations positioned as per option 1 or 2 below, 0mm distance between services and 50mm to edge of seal)

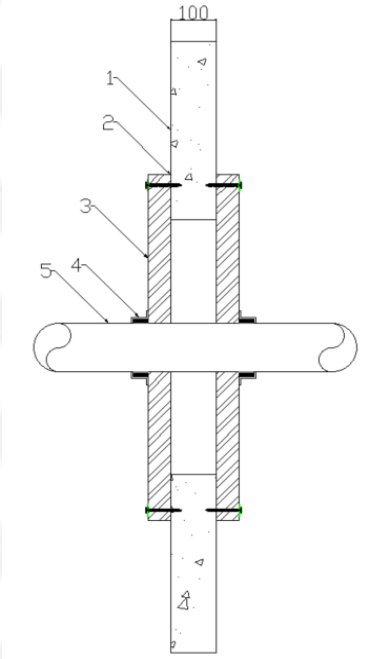

Key
1. Supporting construction
2. Pyrocoustic Sealant
3. Stopseal Batt
4. PipeBloc PCP
5. Penetration Service

Service(s)	PipeBloc PCP Ref	Classification
PP Pipe 32mm Ø, 2.9mm wall thickness	32mm	EI 60 U/C
PP Pipe 40mm Ø, 2.9mm wall thickness	40mm	
PP Pipe 50mm Ø, 2.9mm wall thickness	50mm	
PP Pipe 55mm Ø, 2.9-4.4mm wall thickness	55mm	
PP Pipe 63mm Ø, 2.9-4.4mm wall thickness	63mm	
PP Pipe 75mm Ø, 2.8-6.7mm wall thickness	75mm	
PP Pipe 82mm Ø, 2.8-6.7mm wall thickness	82mm	
PP Pipe 90mm Ø, 2.7-10mm wall thickness	90mm	
PP Pipe 100mm Ø, 2.7-10mm wall thickness	100mm	
PP Pipe 110mm Ø, 2.7-10mm wall thickness	110mm	
PP Pipe 125mm Ø, 3.1mm wall thickness	125mm	
PP Pipe 140mm Ø, 3.5-8mm wall thickness	140mm	
PP Pipe 160mm Ø, 4-14.6mm wall thickness	160mm	

[1]Patress installation of Stopseal Coated Batt. The Batts are installed in horizontal rows and fixed in minimum two vertical edges. Overlap of batts to substrate min 100mm. Batts mechanically fixed to substrate with min 6mm x 80mm steel screws and steel retaining washer. Fixings installed at max 300mm centres.
Collars secured both faces of the substrate utlising 80mm long pig tail screw through to the Stopseal Fire Batt

Appendix UL-EU CERTIFICATE

Max Aperture 730mm Wide x 1200mm High
(Penetrations positioned as per option 1 or 2 below, 0mm distance between services and 50mm to edge of seal)

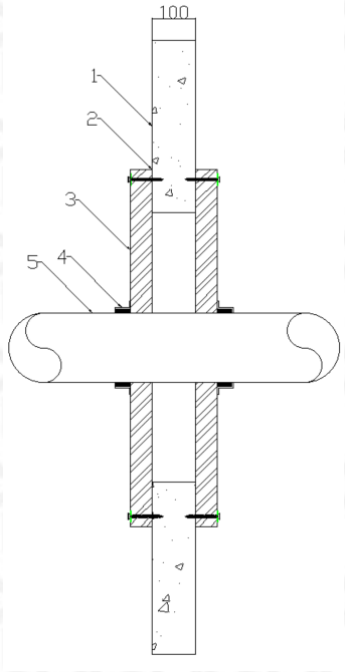

Key
1. Supporting construction
2. Pyrocoustic Sealant
3. Stopseal Batt
4. PipeBloc PCP
5. Penetration Service

Service(s)	PipeBloc PCP Ref	Classification
PE Pipe 32mm Ø, 2.9mm wall thickness	32mm	EI 120 U/C
PE Pipe 40mm Ø, 2.9mm wall thickness	40mm	
PE Pipe 50mm Ø, 2.9mm wall thickness	50mm	
PE Pipe 55mm Ø, 2.9-4.4mm wall thickness	55mm	
PE Pipe 63mm Ø, 2.9-4.4mm wall thickness	63mm	
PE Pipe 75mm Ø, 2.8-6.7mm wall thickness	75mm	
PE Pipe 82mm Ø, 2.8-6.7mm wall thickness	82mm	
PE Pipe 90mm Ø, 2.7-10mm wall thickness	90mm	
PE Pipe 100mm Ø, 2.7-10mm wall thickness	100mm	
PE Pipe 110mm Ø, 2.7-10mm wall thickness	110mm	
PE Pipe 125mm Ø, 3.1mm wall thickness	125mm	
PE Pipe 140mm Ø, 3.9-5.8mm wall thickness	140mm	
PE Pipe 160mm Ø, 4.9-9.5mm wall thickness	160mm	

[1]Patress installation of Stopseal Coated Batt. The Batts are installed in horizontal rows and fixed in minimum two vertical edges. Overlap of batts to substrate min 100mm. Batts mechanically fixed to substrate with min 6mm x 80mm steel screws and steel retaining washer. Fixings installed at max 300mm centres.
Collars secured both faces of the substrate utlising 80mm long pig tail screw through to the Stopseal Fire Batt

Appendix UL-EU CERTIFICATE

Max Aperture 2600mm Wide x 2600mm High
(Penetrations positioned as per option 1 or 2 below, 0mm distance between services and 50mm to edge of seal)

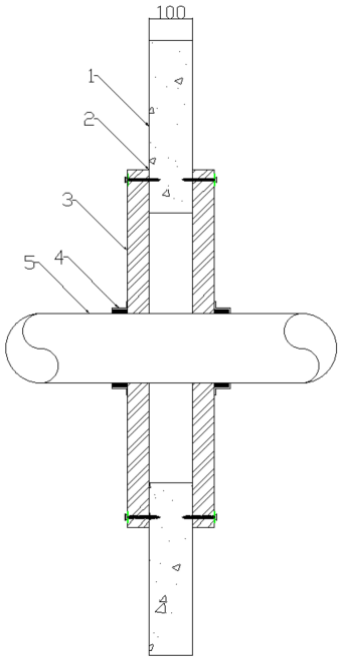

Key
1. Supporting construction
2. Pyrocoustic Sealant
3. Stopseal Batt
4. PipeBloc PCP
5. Penetration Service

Service(s)	PipeBloc PCP Ref	Classification
PE Pipe 32mm Ø, 2.9mm wall thickness	32mm	EI 60 U/C
PE Pipe 40mm Ø, 2.9mm wall thickness	40mm	
PE Pipe 50mm Ø, 2.9mm wall thickness	50mm	
PE Pipe 55mm Ø, 2.9-4.4mm wall thickness	55mm	
PE Pipe 63mm Ø, 2.9-4.4mm wall thickness	63mm	
PE Pipe 75mm Ø, 2.8-6.7mm wall thickness	75mm	
PE Pipe 82mm Ø, 2.8-6.7mm wall thickness	82mm	
PE Pipe 90mm Ø, 2.7-10mm wall thickness	90mm	
PE Pipe 100mm Ø, 2.7-10mm wall thickness	100mm	
PE Pipe 110mm Ø, 2.7-10mm wall thickness	110mm	
PE Pipe 125mm Ø, 3.1mm wall thickness	125mm	
PE Pipe 140mm Ø, 3.9-5.8mm wall thickness	140mm	
PE Pipe 160mm Ø, 4.9-9.5mm wall thickness	160mm	

[1]Patress installation of Stopseal Coated Batt. The Batts are installed in horizontal rows and fixed in minimum two vertical edges. Overlap of batts to substrate min 100mm. Batts mechanically fixed to substrate with min 6mm x 80mm steel screws and steel retaining washer. Fixings installed at max 300mm centres.
Collars secured both faces of the substrate utlising 80mm long pig tail screw through to the Stopseal Fire Batt

Appendix UL-EU CERTIFICATE

Certificate No. UL-EU-00771-CPR
Page 55/157
Date of Issue 2015-04-19

Max Aperture 2600mm Wide x 2600mm High
(Penetrations positioned as per option 1 or 2 below, 0mm distance between services and 50mm to edge of seal)

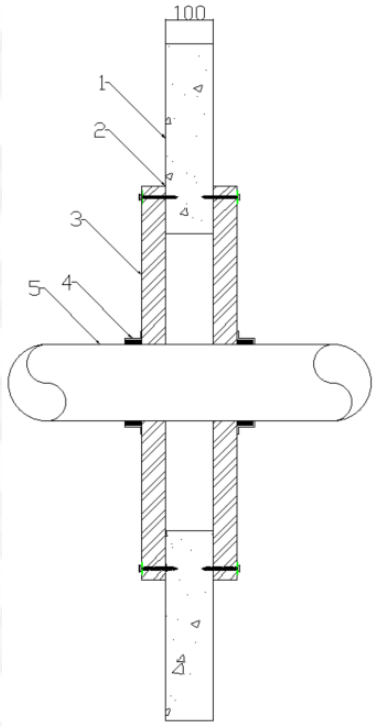

Key
1. Supporting construction
2. Pyrocoustic Sealant
3. Stopseal Batt
4. PipeBloc PCP
5. Penetration Service

Scope and Classifications as below

Intumescent Thickness	
Pipe Diameter	**Intumescent Material**
ø 32 mm - ø 50 mm	40 mm (W) x 2 mm (T)
ø 51 mm - ø 82 mm	40 mm (W) x 4 mm (T)
ø 83 mm - ø 115 mm	40 mm (W) x 6 mm (T)
ø 116 mm - ø 160 mm	40 mm (W) x 8 mm (T)
ø 161 mm - ø 200 mm	40 mm (W) x 10 mm (T)
ø 201 mm - ø 250 mm	40 mm (W) x 12 mm (T)

[1]Patress installation of Stopseal Coated Batt. The Batts are installed in horizontal rows and fixed in minimum two vertical edges. Overlap of batts to substrate min 100mm. Batts mechanically fixed to substrate with min 6mm x 80mm steel screws and steel retaining washer. Fixings installed at max 300mm centres.
Collars secured both faces of the substrate utlising 80mm long pig tail screw through to the Stopseal Fire Batt

Appendix UL-EU CERTIFICATE

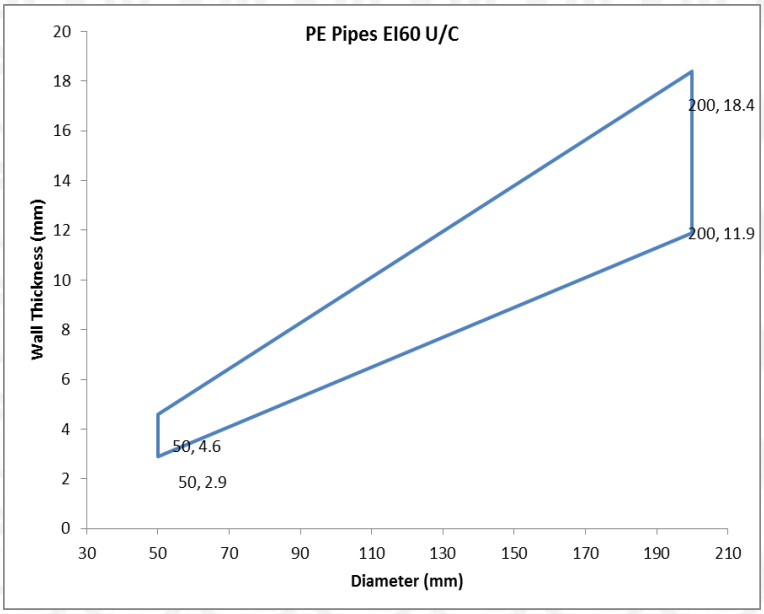

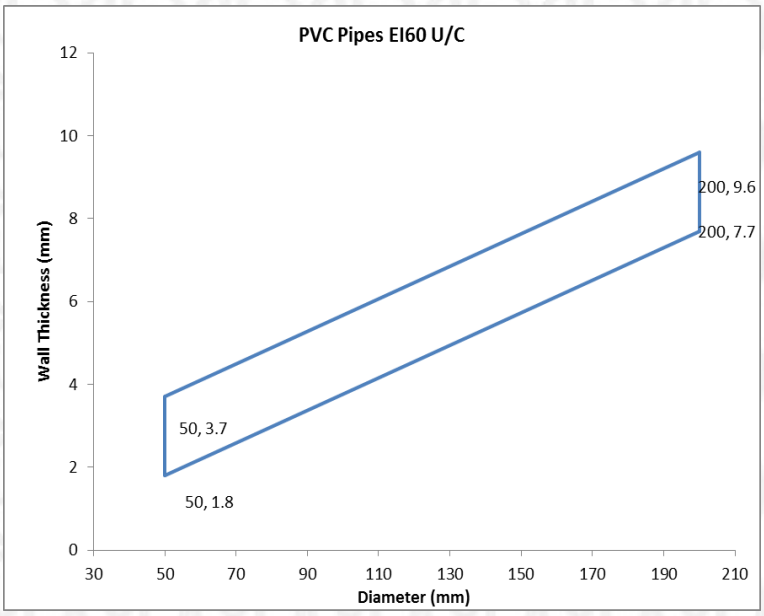

Appendix UL-EU CERTIFICATE

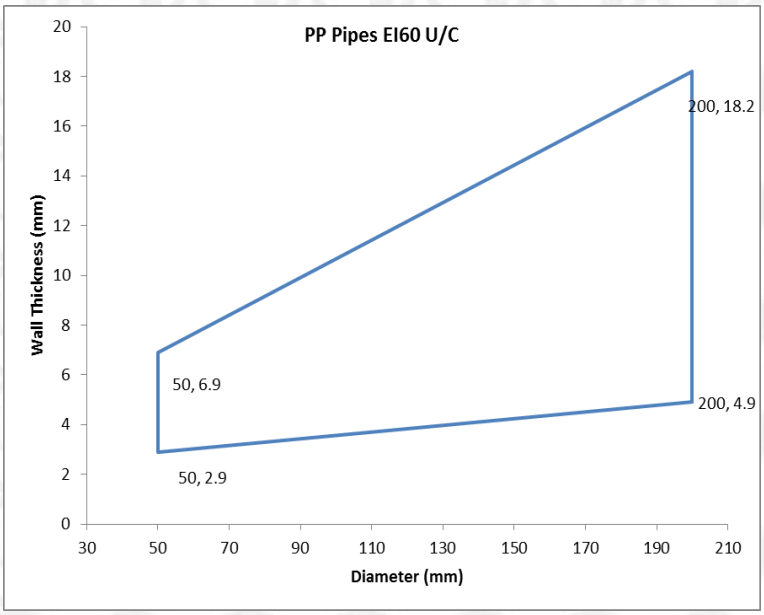

Appendix UL-EU CERTIFICATE

Rigid Walls Minimum Thickness 150mm

Double Layer, Stopseal Fire Batt 50mm, Electrical Cables

Max Aperture 750mm Wide x 1100mm High	
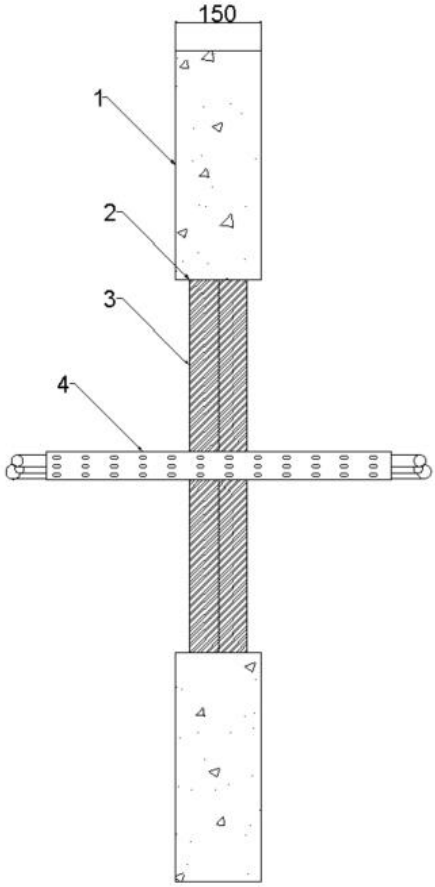	Key 1. Supporting construction 2. Pyrocoustic Sealant 3. Stopseal Batt 4. Penetration Service
Service(s)	**Classification**
Electrical cables up to 0-21mm Ø	E120 EI90
Cable Tray	EI 60

Appendix UL-EU CERTIFICATE

Single Layer, Stopseal Fire Batt 50mm, Electrical Cables

Max Aperture 750mm Wide x 1100mm High	
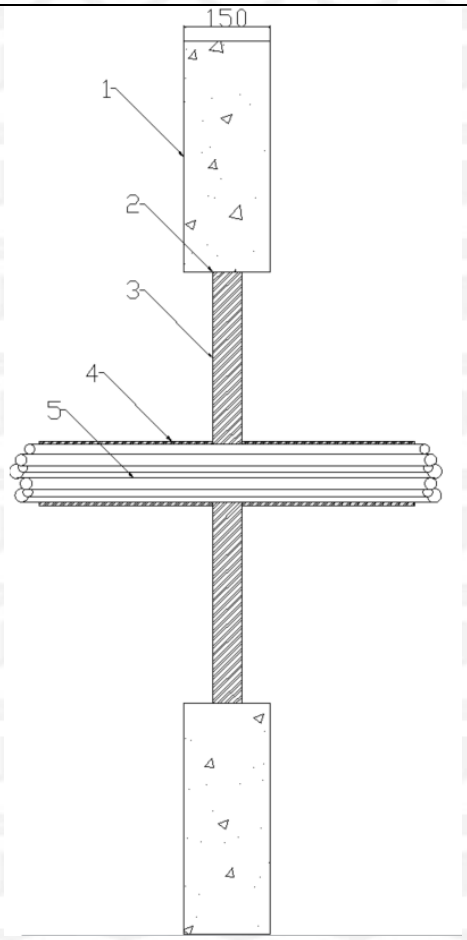	Key 1. Supporting construction 2. Pyrocoustic Sealant 3. Stopseal Batt 4. Insulation 5. Penetration Service
Service(s)	**Classification**
[1]Electrical cables up to 80mm Ø	EI 60
[1]Cable Trays and Ladders	EI 60
[1]100 mm diameter bundle telecommunication cable type "F"	EI 60
[1]Unsheathed electrical cables up to 24mmØ	EI 60

[1]Cables and cable trays wrapped with a single layer of 6mm thick FSi Thermal Defense Wrap (L/I 300mm)

Appendix UL-EU CERTIFICATE

Max Aperture 750mm Wide x 1100mm High	
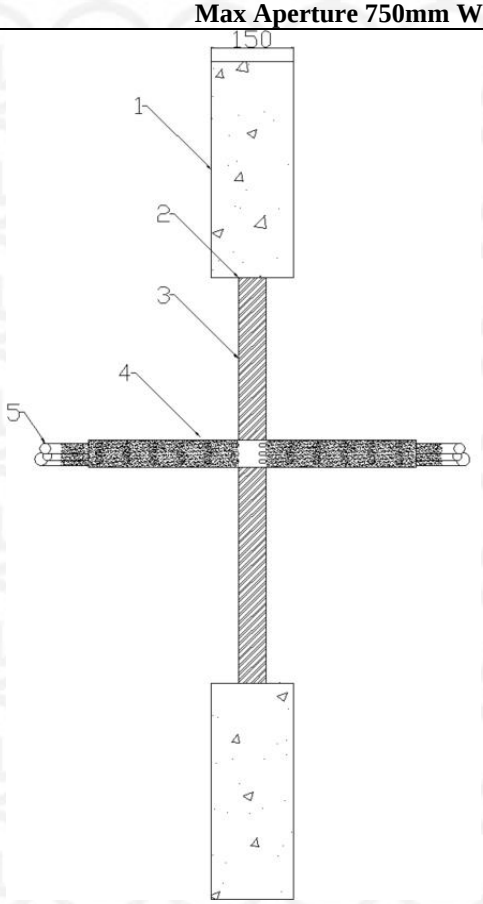	Key 1. Supporting construction 2. Pyrocoustic Sealant 3. Stopseal Batt 4. Insulation 5. Penetration Service
Penetration Specification	**Classification**
*500mm perforated cable tray	EI 30
*Electrical cables up to 21mm ø	EI 45
*1 off 'C1' Cable	
*1 off 'C2' Cable	
*1 off 'C3' Cable	

*All cables coated with 2mm DFT PST Coating 300mm along the cables both sides of the seal

Appendix UL-EU CERTIFICATE

Single Layer, Stopseal Fire Batt 50mm, Insulated Metallic Pipes

Max Aperture 750mm Wide x 1100mm High	
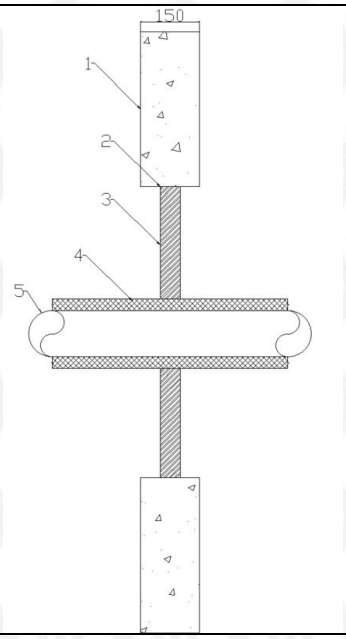	Key 1. Supporting construction 2. Pyrocoustic Sealant 3. Stopseal Batt 4. Insulation 5. Penetration Service
Service(s)	**Classification**
[1]Steel or Copper Pipe 108mm Ø, 1.5mm – 14.2mm Wall Thickness. (C/S) 40mm stone wool insulation (min 140Kg/m^3)	E60 C/U EI45 C/U
Steel or Copper Pipe 42mm Ø, 1.2mm – 14.2mm wall thickness. (L/I 300mm) 40mm stone wool insulation (min 40Kg/m^3)	EI45 C/U
Steel or Copper Pipe 42mm – 159mm Ø, 2mm – 14.2mm wall thickness. (L/I 300mm) 40mm stone wool insulation (min 40Kg/m^3)	E45 C/U EI20 C/U
Steel or Copper Pipe 42mm – 159mm Ø, 2mm – 14.2mm wall thickness. (C/I) 40mm stone wool insulation (min 40Kg/m^3)	E45 C/U EI30 C/U

Appendix UL-EU CERTIFICATE

Single Layer, Stopseal Fire Batt 50mm, Plastic Pipes

Max Aperture 750mm Wide x 1100mm High	
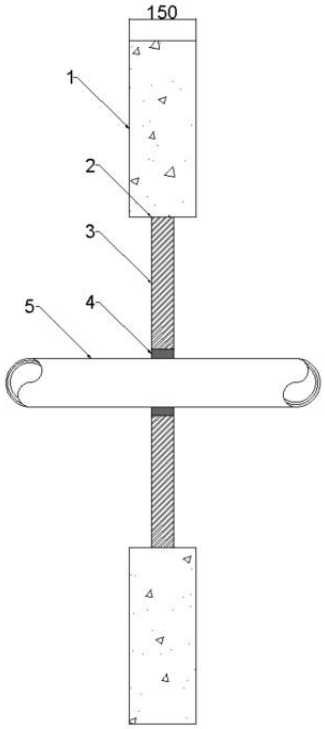	Key 1. Supporting construction 2. Pyrocoustic Sealant 3. Stopseal Batt 4. Pyropro HPE 5. Penetration Service

Penetration Specification	**Classification**
Uponor MLC (Multi-Layer Composite) Pipe 40mm ø 4mm wall thickness	E 45 U/C EI 30 U/C
Uponor MLC (Multi-Layer Composite) Pipe 50mm ø 4.5mm wall thickness	
Uponor MLC (Multi-Layer Composite) Pipe 63mm ø 6mm wall thickness	
Uponor MLC (Multi-Layer Composite) Pipe 75mm ø 7.5mm wall thickness	
Uponor MLC (Multi-Layer Composite) Pipe 90mm ø 8.5mm wall thickness	
Uponor MLC (Multi-Layer Composite) Pipe 110mm ø 10mm wall thickness	

Pyropro HPE 20mm annulus full 50mm depth of the Stopseal Coated Batt

Appendix UL-EU CERTIFICATE

Certificate No. UL-EU-00771-CPR
Page 63/157
Date of Issue 2015-04-19

Max Aperture 750mm Wide x 1100mm High

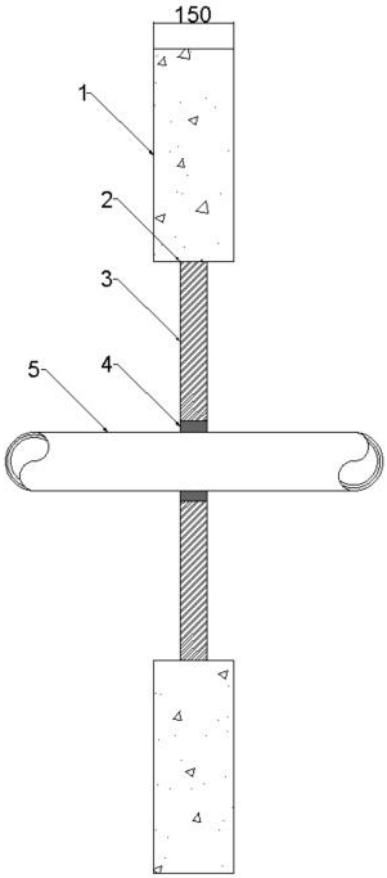

Key
1. Supporting construction
2. Pyrocoustic Sealant
3. Stopseal Batt
4. Pyropro HPE
5. Penetration Service

Penetration Specification	Classification
PVC Pipe 50mm ø 2.4mm wall thickness	**EI45 U/C**
Also scope as per graphs below	

Pyropro HPE 20mm annulus full 50mm depth of the Stopseal Coated Batt

Appendix UL-EU CERTIFICATE

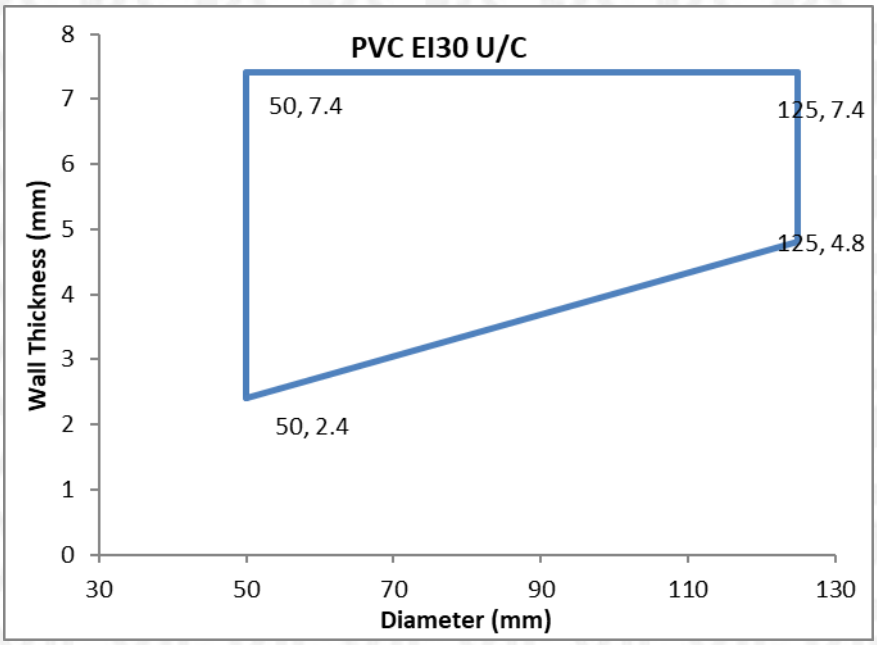

Appendix UL-EU CERTIFICATE

Double Layer, Stopseal Fire Batt 50mm, Electrical Cables

Max Aperture 730mm Wide x 1200mm High	
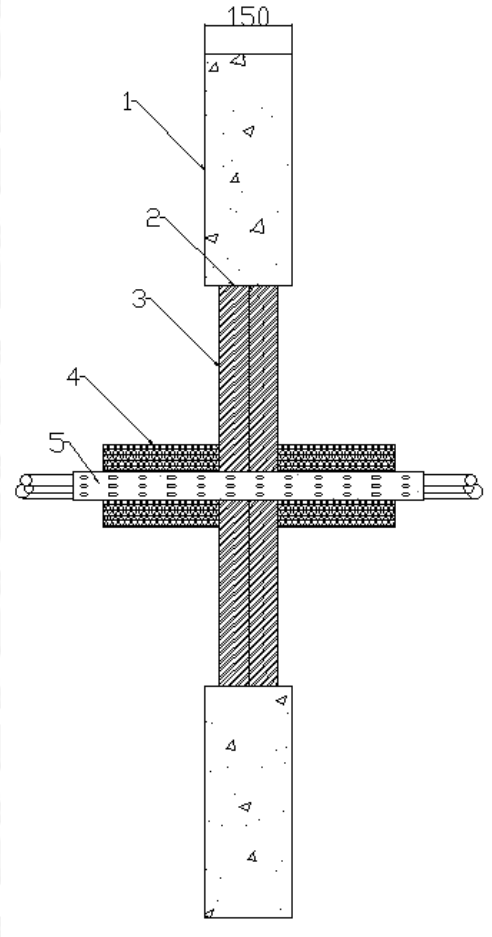	Key 1. Supporting construction 2. Pyrocoustic Sealant 3. Stopseal Batt 4. Insulation 5. Penetration Service

Service(s)	**Classification**
[1]Electrical cables up to 21mm dia	EI 120
[1]Electrical cables 22mm – 80mm dia	E 120 EI 90
[1]Cable Trays and Ladders	EI 120
[1]100 mm diameter bundle telecommunication cable type “F”	EI 120
[1]Unsheathed electrical cables up to 24mm dia	EI 120

[1]Cables and cable trays wrapped with Stone Wool Insulation 45mm thick, 40Kg/m^3 (L/I 200mm)

Appendix UL-EU CERTIFICATE

Max Aperture 2600mm Wide x 2600mm High

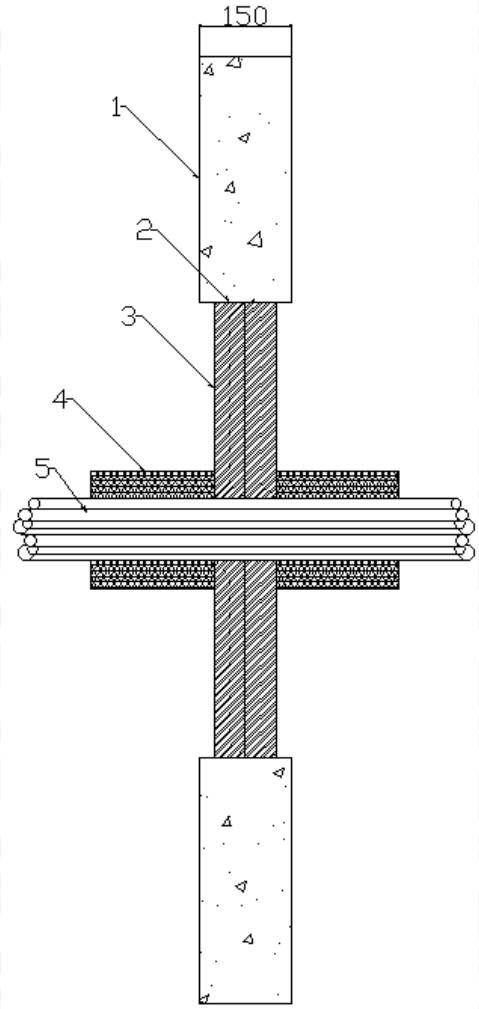

Key
1. Supporting construction
2. Pyrocoustic Sealant
3. Stopseal Batt
4. Insulation
5. Penetration Service

Service(s)	Classification
[1]Electrical cables up to 21mm dia	EI 60
[1]Electrical cables 22mm – 80mm dia	
[1]Cable Trays and Ladders	
[1]100 mm diameter bundle telecommunication cable type “F”	
[1]Unsheathed electrical cables up to 24mm dia	

[1]Cables and cable trays wrapped with Stone Wool Insulation 45mm thick, 40Kg/m^3 (L/I 200mm)

Appendix UL-EU CERTIFICATE

Max Aperture 750mm Wide x 1100mm High	
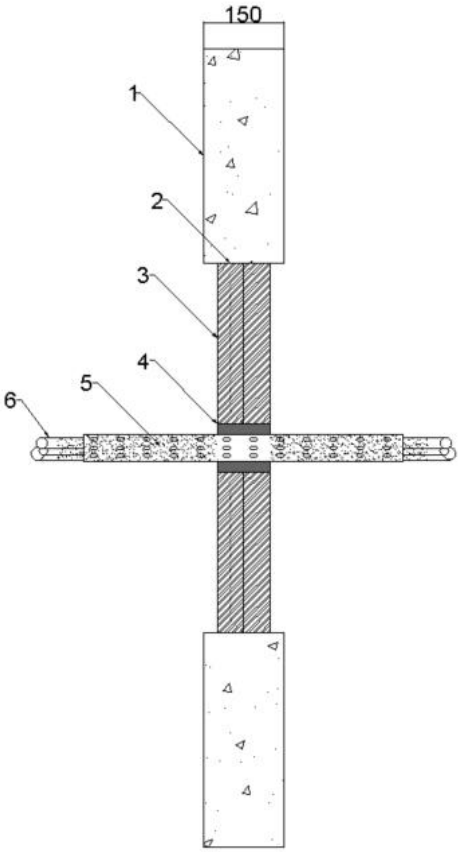	Key 1. Supporting construction 2. Pyrocoustic Sealant 3. Stopseal Batt 4. Pyropro HPE 5. PST Coating 6. Penetration Service
Penetration Specification	**Classification**
*500mm perforated cable tray	EI120
*Electrical cables up to 21mm ø	
*1 off 'C1' Cable	
*1 off 'C2' Cable	E120 EI90
*1 off 'C3' Cable	EI120

*All cables coated with 2mm DFT PST Coating 300mm along the cables both sides of the seal
Pyropro HPE 20mm annulus full 50mm depth of the Stopseal Coated Batt

Appendix UL-EU CERTIFICATE

Max Aperture 2600mm Wide x 2600mm High	
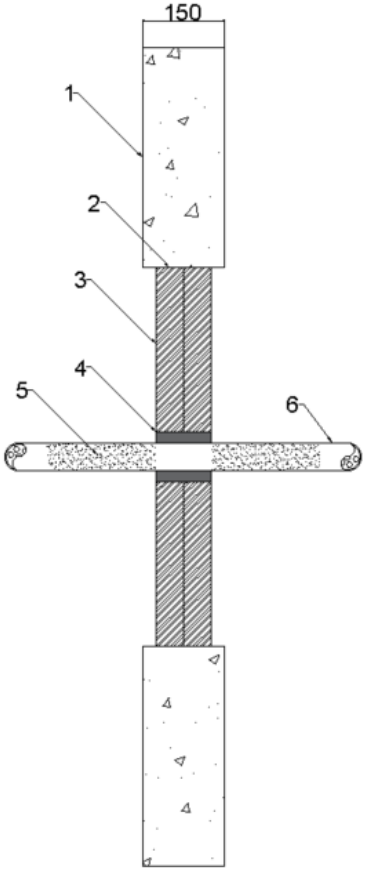	Key 1. Supporting construction 2. Pyrocoustic Sealant 3. Stopseal Batt 4. Pyropro HPE 5. PST Coating 6. Penetration Service

Penetration Specification	Classification
*500mm perforated cable tray	EI 60
*Electrical cables up to 21mm ø	
*1 off 'C1' Cable	
*1 off 'C2' Cable	
*1 off 'C3' Cable	

*All cables coated with 2mm DFT PST Coating 300mm along the cables both sides of the seal
Pyropro HPE 20mm annulus full 50mm depth of the Stopseal Coated Batt

Appendix UL-EU CERTIFICATE

Double Layer, Stopseal Fire Batt 50mm, Insulated Metallic Pipes

Max Aperture 730mm Wide x 1200mm High	
Service(s) 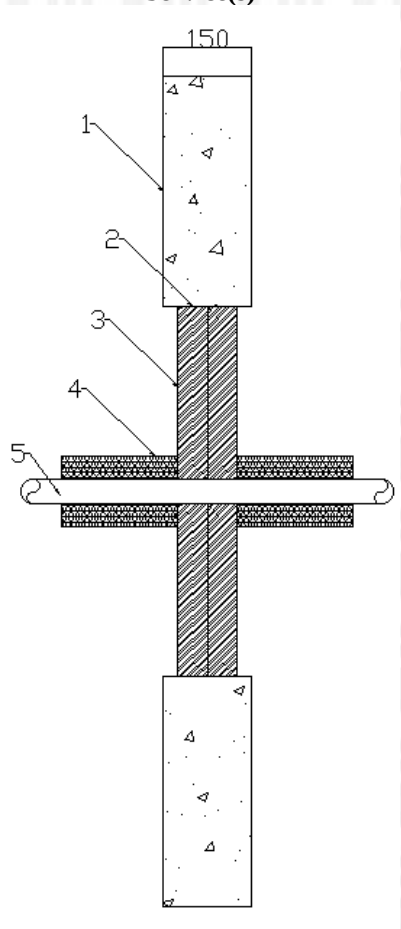 	Key 1. Supporting construction 2. Pyrocoustic Sealant 3. Stopseal Batt 4. Insulation 5. Penetration Service
Penetration Specification	**Classification**
Steel or Copper Pipe 42mm Ø, 1.2mm – 14.2mm wall thickness. (L/I 300mm) 40mm stone wool insulation (min 40Kg/m^3)	E 120 C/U EI 60 C/U
Steel or Copper Pipe 42mm – 159mm Ø, 2mm – 14.2mm wall thickness. (L/I 300mm) 40mm stone wool insulation (min 40Kg/m^3)	E 120 C/U EI 30 C/U

Appendix UL-EU CERTIFICATE

Max Aperture 2600mm Wide x 2600mm High

Service(s)

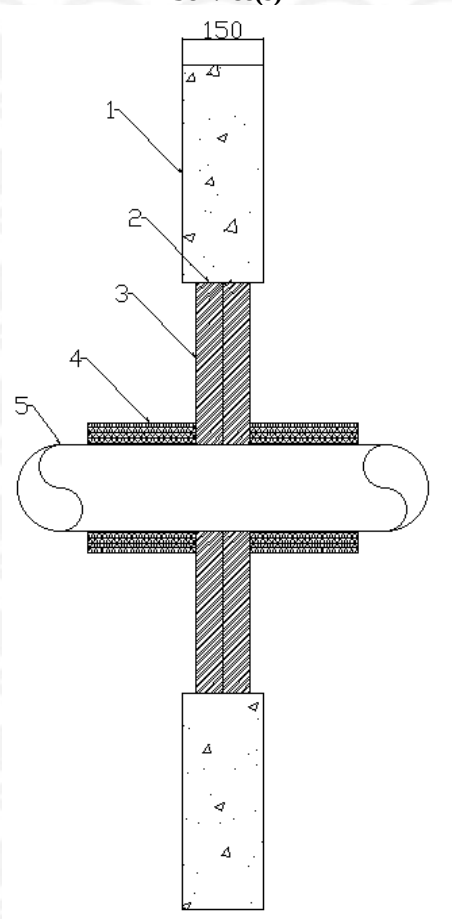

Key
1. Supporting construction
2. Pyrocoustic Sealant
3. Stopseal Batt
4. Insulation
5. Penetration Service

Penetration Specification	Classification
Steel or Copper Pipe 42mm Ø, 1.2mm – 14.2mm wall thickness. (L/I 300mm) 40mm stone wool insulation (min 40Kg/m^3)	EI 60 C/U
Steel or Copper Pipe 42mm – 159mm Ø, 2mm – 14.2mm wall thickness. (L/I 300mm) 40mm stone wool insulation (min 40Kg/m^3)	E 60 C/U EI 30 C/U

Appendix UL-EU CERTIFICATE

Max Aperture 750mm Wide x 1100mm High		
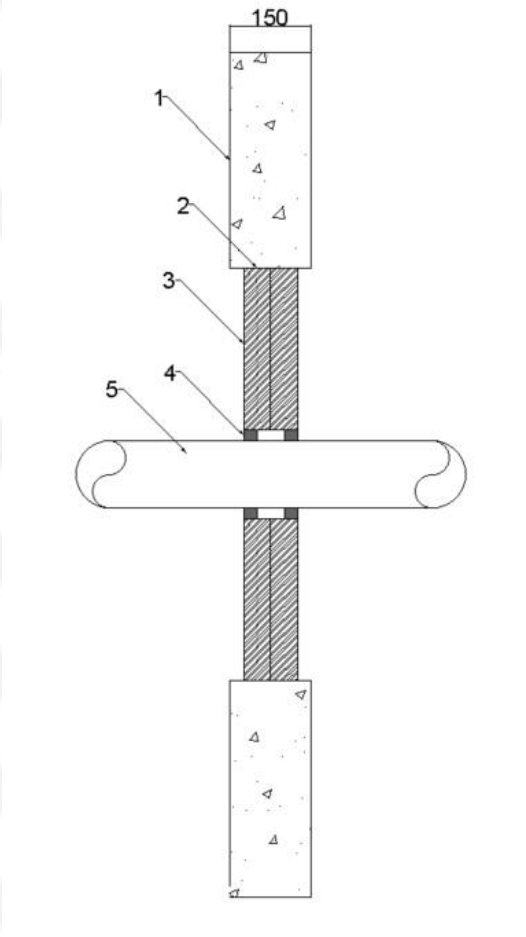		Key 1. Supporting construction 2. Pyrocoustic Sealant 3. Stopseal Batt 4. Pyropro HPE 5. Penetration Service
Penetration Specification	**Pyropro HPE**	**Classification**
Pipe Diameters as below	20mm annulus, 25mm deep both faces of the Stopseal Coated Batt	See graphs below

Appendix UL-EU CERTIFICATE

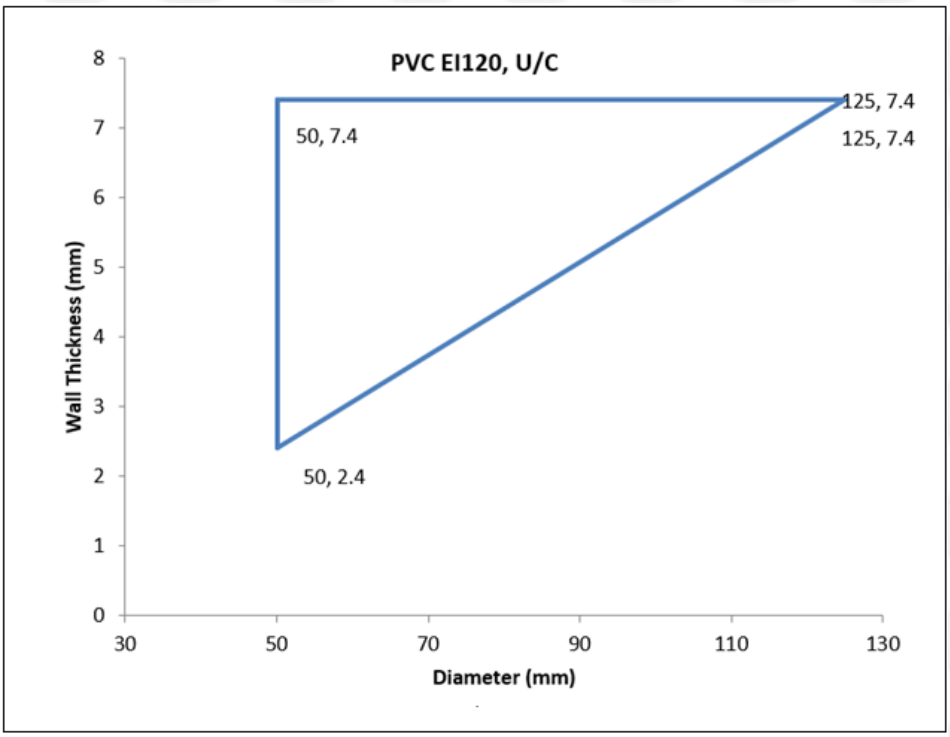

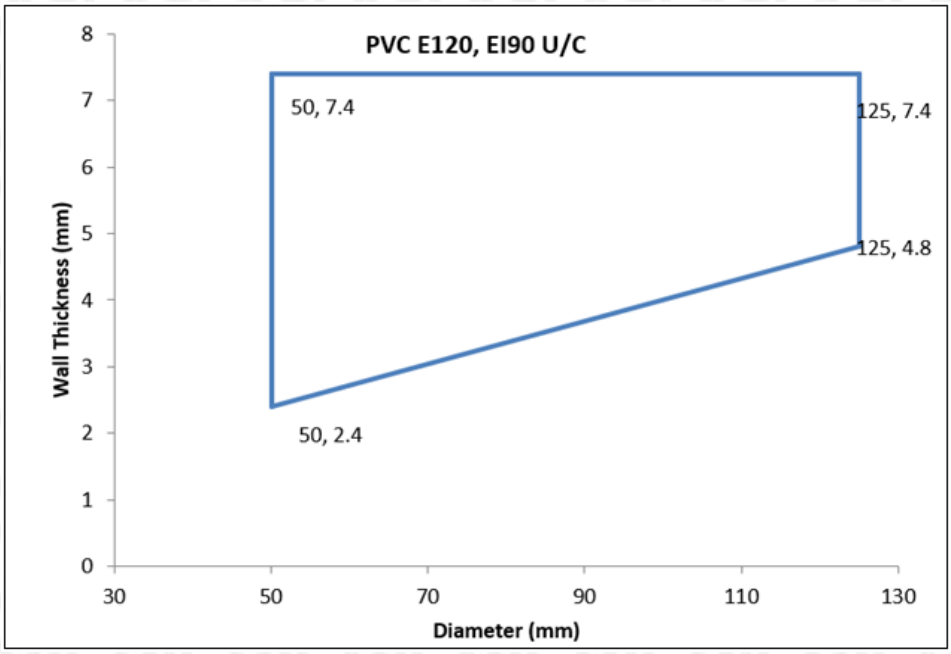

Appendix UL-EU CERTIFICATE

Max Aperture 2600mm Wide x 2600mm High		
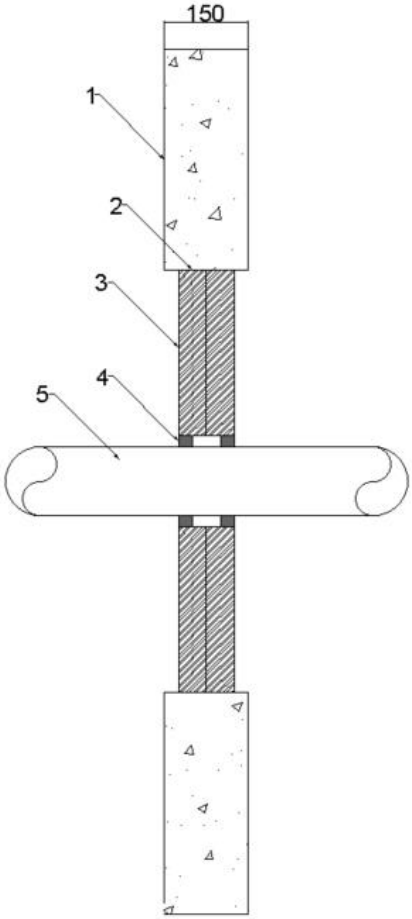		Key 1. Supporting construction 2. Pyrocoustic Sealant 3. Stopseal Batt 4. Pyropro HPE 5. Penetration Service
Penetration Specification	**Pyropro HPE**	**Classification**
Pipe Diameters as below	20mm annulus, 25mm deep both faces of the Stopseal Coated Batt	EI 60

Appendix UL-EU CERTIFICATE

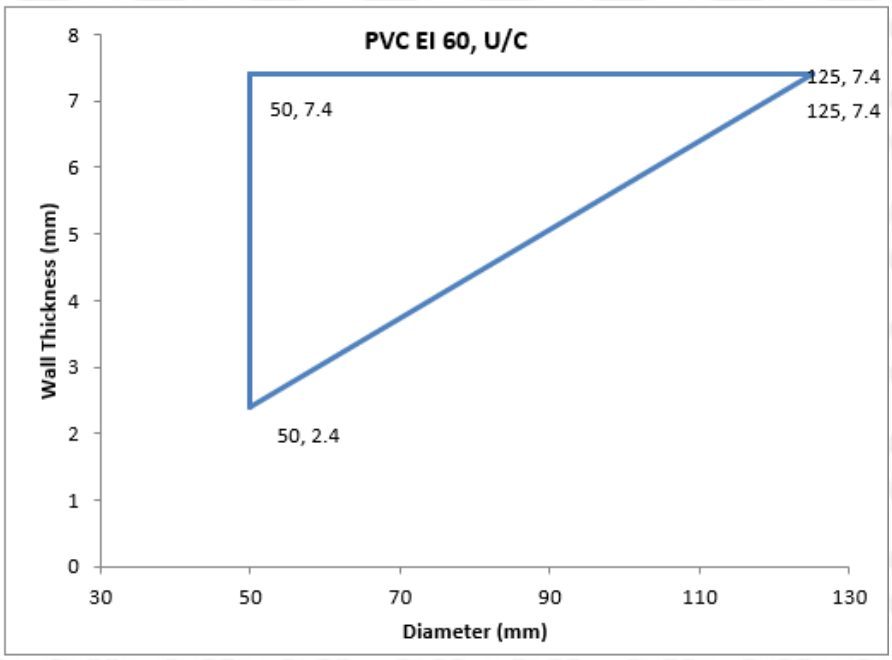

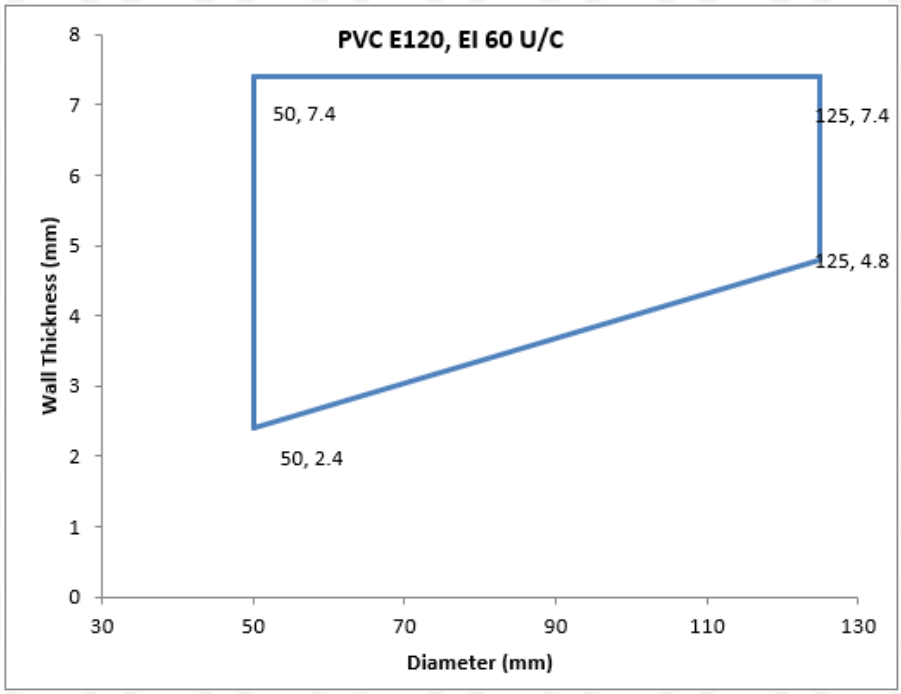

Appendix UL-EU CERTIFICATE

Max Aperture 750mm Wide x 1100mm High

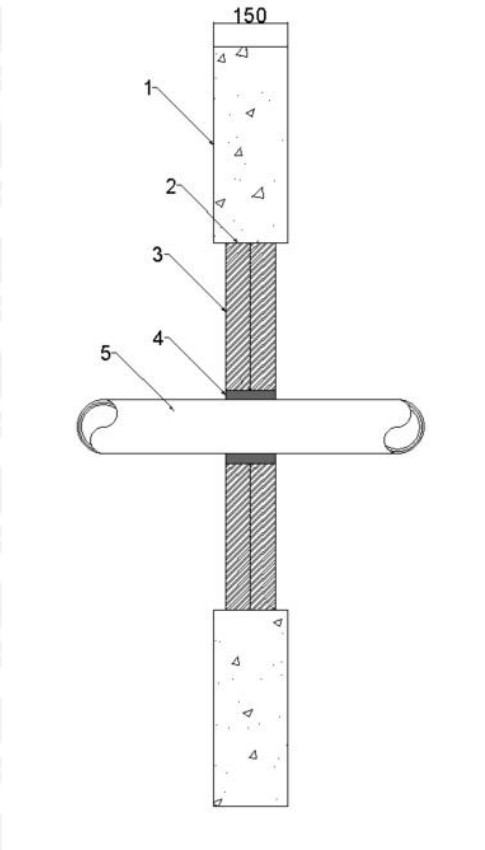

Key
1. Supporting construction
2. Pyrocoustic Sealant
3. Stopseal Batt
4. Pyropro HPE
5. Penetration Service

Penetration Specification	Classification
Uponor MLC (Multi-Layer Composite) Pipe 40mm ø 4mm wall thickness	EI 120 U/C
Uponor MLC (Multi-Layer Composite) Pipe 50mm ø 4.5mm wall thickness	
Uponor MLC (Multi-Layer Composite) Pipe 63mm ø 6mm wall thickness	
Uponor MLC (Multi-Layer Composite) Pipe 75mm ø 7.5mm wall thickness	
Uponor MLC (Multi-Layer Composite) Pipe 90mm ø 8.5mm wall thickness	
Uponor MLC (Multi-Layer Composite) Pipe 110mm ø 10mm wall thickness	

Pyropro HPE 20mm annulus full 50mm depth of the Stopseal Coated Batt

Appendix UL-EU CERTIFICATE

Max Aperture 2600mm Wide x 2600mm High

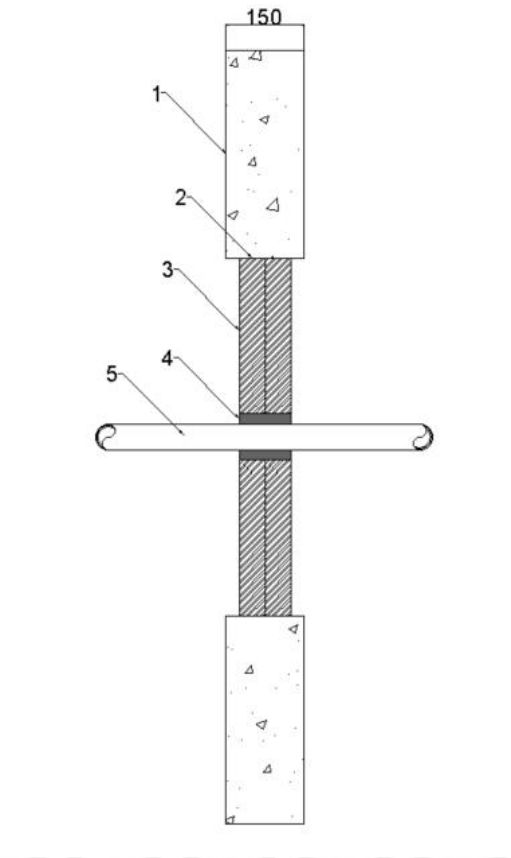

Key
1. Supporting construction
2. Pyrocoustic Sealant
3. Stopseal Batt
4. Pyropro HPE
5. Penetration Service

Penetration Specification	Classification
Uponor MLC (Multi-Layer Composite) Pipe 40mm ø 4mm wall thickness	EI 60 U/C
Uponor MLC (Multi-Layer Composite) Pipe 50mm ø 4.5mm wall thickness	
Uponor MLC (Multi-Layer Composite) Pipe 63mm ø 6mm wall thickness	
Uponor MLC (Multi-Layer Composite) Pipe 75mm ø 7.5mm wall thickness	
Uponor MLC (Multi-Layer Composite) Pipe 90mm ø 8.5mm wall thickness	
Uponor MLC (Multi-Layer Composite) Pipe 110mm ø 10mm wall thickness	

Pyropro HPE 20mm annulus full 50mm depth of the Stopseal Coated Batt

Appendix UL-EU CERTIFICATE

Flexible Walls Minimum Thickness 70mm

Single Layer Pattress Stopseal Fire Batt 50mm, Electrical Cables

Max Aperture 570mm Wide x 200mm High

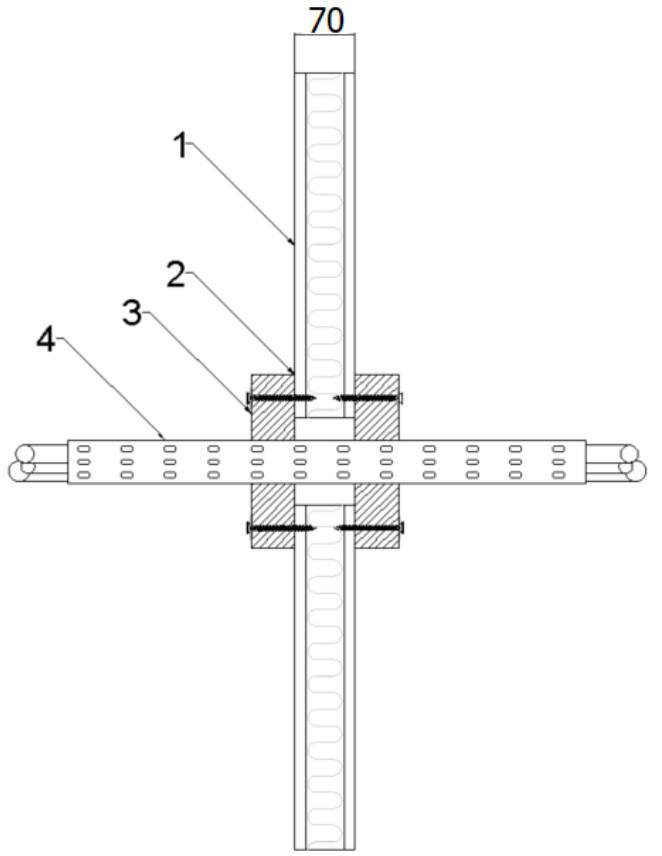

Key
1. Supporting Construction
2. Pyrocoustic Sealant
3. Stopseal Batt
4. Service Penetration

Service(s)	Classification
500mm wide x 60mm deep steel cable basket containing 3 x type 'B' cable and 20 x bundle of telecoms cables	EI 90
500mm wide x 60mm deep steel cable tray containing 1 x type 'B' cable, 3 x type 'A1' cable, 3 x type 'A2' cable, and 3 x type 'A3' cable	

[1]Patress installation of Stopseal Coated Batt. The Batts are installed in horizontal rows and fixed on all edges. Overlap of batts to substrate min 50mm. Batts mechanically fixed to substrate with min 6mm x 80mm steel screws and steel retaining washer. Fixings installed at max 300mm centres

Appendix UL-EU CERTIFICATE

Single Layer Pattress Stopseal Fire Batt 50mm, Electrical Cables and Conduits

Max Aperture 570mm Wide x 200mm High

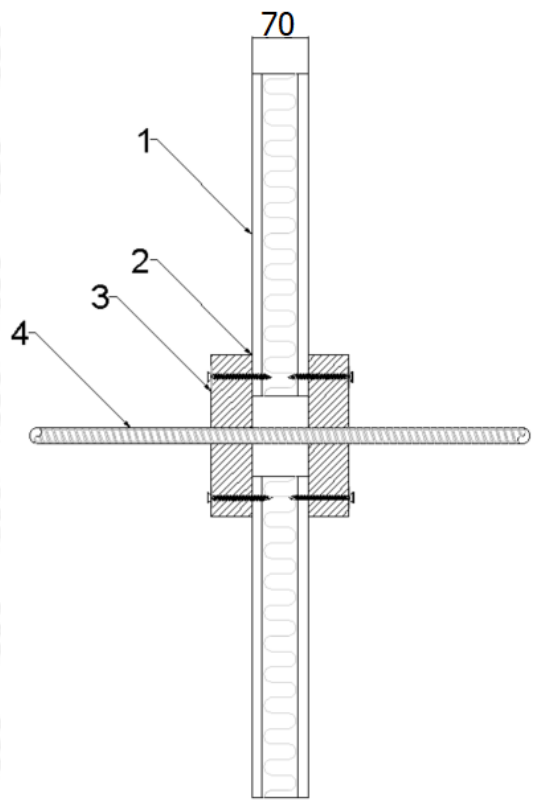

Key
1. Supporting Construction
2. Pyrocoustic Sealant
3. Stopseal Batt
4. Service Penetration

Service(s)	**Classification**
20mm dia Adaptaflex SPL20 flexible conduit	EI 90
20mm dia Kopex KSU 316 stainless steel flexible conduit	
150mm wide x 60mm deep steel cable tray containing 4 x FP200 Gold (Firealarm cable 7mm dia red) Cables	E 90 EI 60

[1]Patress installation of Stopseal Coated Batt. The Batts are installed in horizontal rows and fixed on all edges. Overlap of batts to substrate min 50mm. Batts mechanically fixed to substrate with min 6mm x 80mm steel screws and steel retaining washer. Fixings installed at max 300mm centres

Appendix UL-EU CERTIFICATE

Flexible Walls Minimum Thickness 75mm

Single Layer Patress Stopseal Fire Batt 50mm, Electrical Cables

Max Aperture 570mm Wide x 200mm High

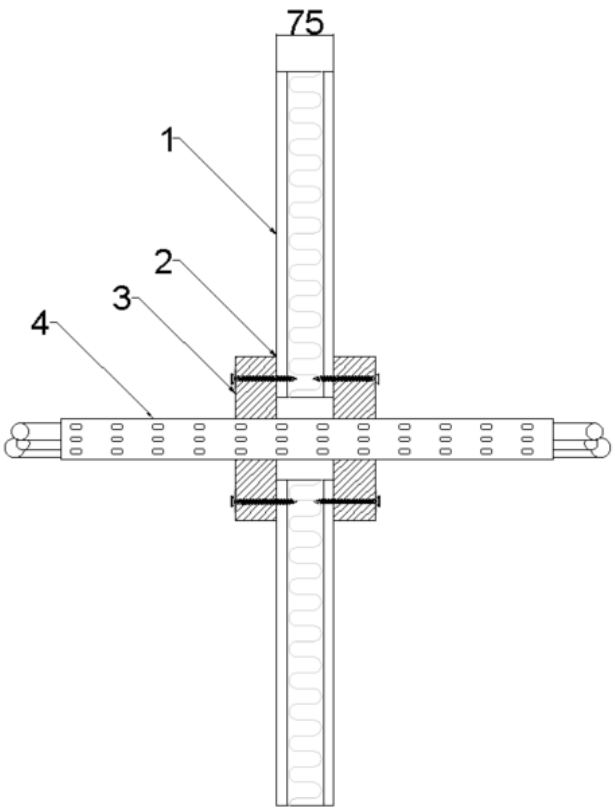

Key
1. Supporting construction
2. Pyrocoustic Sealant
3. Stopseal Batt
4. Penetration Service

Service(s)	Classification
500mm wide x 60mm deep steel cable basket containing 3 x type 'B' cable and 20 x bundle of telecoms cables	EI 90
500mm wide x 60mm deep steel cable tray containing 1 x type 'B' cable, 3 x type 'A1' cable, 3 x type 'A2' cable, and 3 x type 'A3' cable	

[1]Patress installation of Stopseal Coated Batt. The Batts are installed in horizontal rows and fixed in minimum two vertical edges. Overlap of batts to substrate min 50mm. Batts mechanically fixed to substrate with min 6mm x 80mm steel screws and steel retaining washer. Fixings installed at max 300mm centres

Appendix UL-EU CERTIFICATE

Single Layer Patress Stopseal Fire Batt 50mm, Electrical Cables and Conduits

Max Aperture 200mm Wide x 200mm High

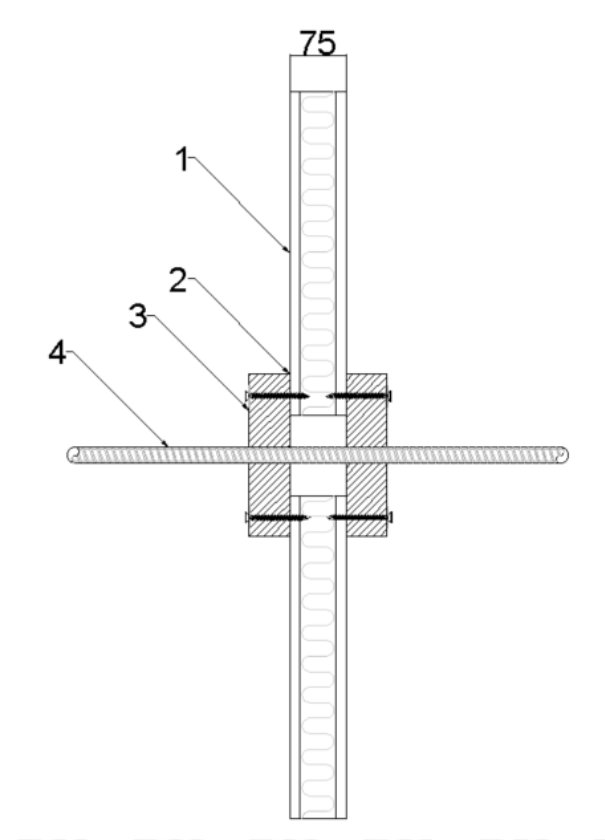

Key
1. Supporting construction
2. Pyrocoustic Sealant
3. Stopseal Batt
4. Penetration Service

Service(s)	**Classification**
20mm dia Adaptaflex SPL20 flexible conduit	EI 90
20mm dia Kopex KSU 316 stainless steel flexible conduit	
150mm wide x 60mm deep steel cable tray	
4 x FP200 Gold (Firealarm cable 7mm dia red) Cables	E 90 EI 60

[1]Patress installation of Stopseal Coated Batt. The Batts are installed in horizontal rows and fixed in minimum two vertical edges. Overlap of batts to substrate min 50mm. Batts mechanically fixed to substrate with min 6mm x 80mm steel screws and steel retaining washer. Fixings installed at max 300mm centres

Appendix UL-EU CERTIFICATE

Flexible Walls Minimum Thickness 75mm

Single Layer Pattress Stopseal Fire Batt 50mm, Electrical Cables and Cable Trunking

Max Aperture 70mm Wide x 70mm High

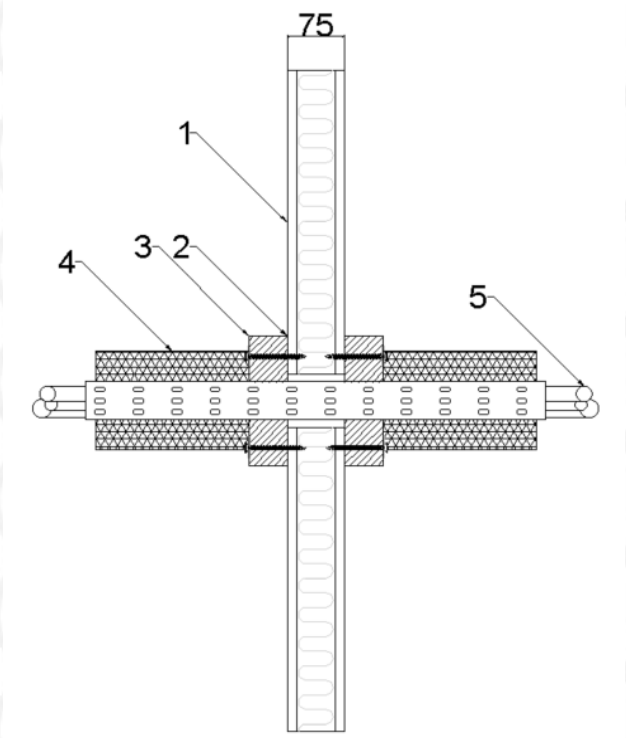

Key
1. Supporting construction
2. Pyrocoustic Sealant
3. Stopseal Batt
4. Insulation
5. Penetration Service

Service(s)	Classification
50mm x 50mm Insulated steel cable trunking, Stone Wool 40mm thick, 45kg/m^3 (LI 400mm). S-Line Pillow tightly fitted around the cables in the section of trunking within the depth of the partition.	EI 60 U/U
Cables 1xA1, 1xA2, 1xA3	EI 60
Cables 1xA1	
Cables 1xA2	
Cables 1xA3	

[1]Patress installation of Stopseal Coated Batt. The Batts are installed in horizontal rows and fixed in minimum two vertical edges. Overlap of batts to substrate min 50mm. Batts mechanically fixed to substrate with min 6mm x 80mm steel screws and steel retaining washer. Fixings installed at max 300mm centres

Appendix UL-EU CERTIFICATE

Single Layer Pattress Stopseal Fire Batt 50mm, Electrical Cables and Cable Trunking

Max Aperture 170mm Wide x 170mm High

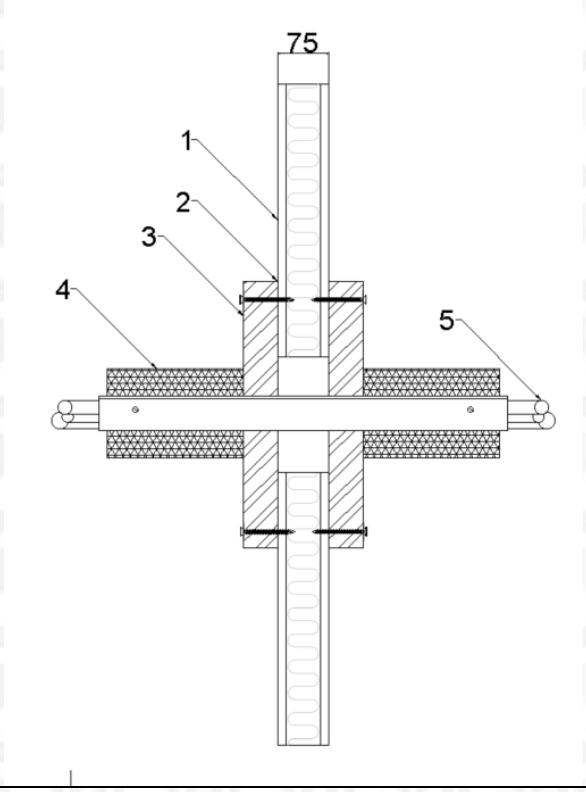

Key
1. Supporting construction
2. Pyrocoustic Sealant
3. Stopseal Batt
4. Insulation
5. Penetration Service

Service(s)	**Classification**
150mm x 150mm Insulated steel cable trunking, Stone Wool 40mm thick, 45kg/m^3 (LI 400mm). S-Line Pillow tightly fitted around the cables in the section of trunking within the depth of the partition.	EI 60 U/U
Cables 1xB1, 1xC1, 1xG1, 1xG2	EI 60
Cables 1xB1	
Cables 1xC1	
Unsheathed electrical cables 0-24mm dia	

[1]Patress installation of Stopseal Coated Batt. The Batts are installed in horizontal rows and fixed in minimum two vertical edges. Overlap of batts to substrate min 50mm. Batts mechanically fixed to substrate with min 6mm x 80mm steel screws and steel retaining washer. Fixings installed at max 300mm centres

Appendix UL-EU CERTIFICATE

Single Layer Stopseal Fire Batt 50mm, Plastic Pipes

Max Aperture 600mm Wide x 600mm High
(Penetrations positioned as per option 1 or 2 below, 0mm distance between services and 50mm to edge of seal)
Collars secured both faces of the substrate utilising 80mm long steel pig tail screw through to Stopseal Fire Batt

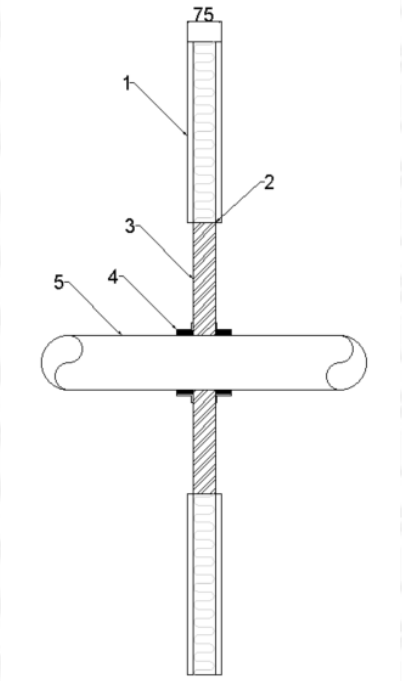

Key
1. Supporting construction
2. Pyrocoustic Sealant
3. Stopseal Batt
4. PipeBloc PCP
5. Penetration Service

Service(s)	PipeBloc PCP Ref	Classification
PVC Pipe 32mm Ø, 1.8mm wall thickness	32mm	EI 60 U/C
PVC Pipe 40mm Ø, 1.8mm wall thickness	40mm	
PVC Pipe 50mm Ø, 1.8mm wall thickness	50mm	
PVC Pipe 55mm Ø, 1.8-2.3mm wall thickness	55mm	
PVC Pipe 63mm Ø, 2.3-3mm wall thickness	63mm	
PVC Pipe 75mm Ø, 3.1-4.8mm wall thickness	75mm	
PVC Pipe 82mm Ø, 3.1-4.8mm wall thickness	82mm	
PVC Pipe 90mm Ø, 4.2-7.4mm wall thickness	90mm	
PVC Pipe 100mm Ø, 4.2-7.4mm wall thickness	100mm	
PVC Pipe 110mm Ø, 4.2-7.4mm wall thickness	110mm	
PVC Pipe 125mm Ø, 6mm wall thickness	125mm	
PVC Pipe 140mm Ø, 6.1-7.5mm wall thickness	140mm	

Appendix UL-EU CERTIFICATE

Max Aperture 600mm Wide x 600mm High
(Penetrations positioned as per option 1 or 2 below, 0mm distance between services and 50mm to edge of seal)
Collars secured both faces of the substrate utilising 80mm long steel pig tail screw through to Stopseal Fire Batt

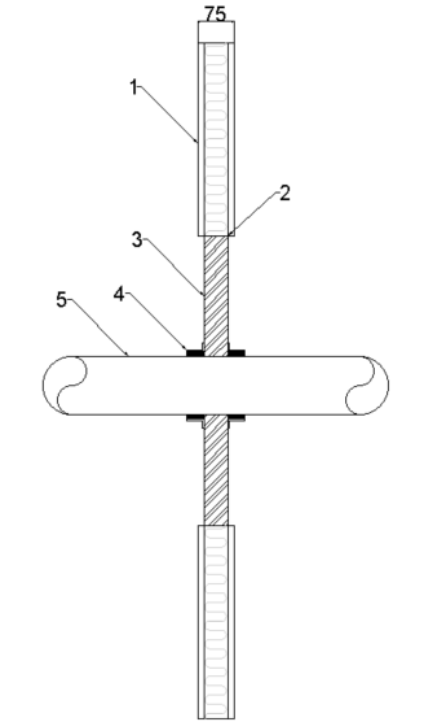

Key
1. Supporting construction
2. Pyrocoustic Sealant
3. Stopseal Batt
4. PipeBloc PCP
5. Penetration Service

Service(s)	PipeBloc PCP Ref	Classification
PE Pipe 32mm Ø, 2.9mm wall thickness	32mm	EI 60 U/C
PE Pipe 40mm Ø, 2.9mm wall thickness	40mm	
PE Pipe 50mm Ø, 2.9mm wall thickness	50mm	
PE Pipe 55mm Ø, 2.9-4.4mm wall thickness	55mm	
PE Pipe 63mm Ø, 2.9-4.4mm wall thickness	63mm	
PE Pipe 75mm Ø, 2.8-6.7mm wall thickness	75mm	
PE Pipe 82mm Ø, 2.8-6.7mm wall thickness	82mm	
PE Pipe 90mm Ø, 2.7-10mm wall thickness	90mm	
PE Pipe 100mm Ø, 2.7-10mm wall thickness	100mm	
PE Pipe 110mm Ø, 2.7-10mm wall thickness	110mm	
PE Pipe 125mm Ø, 3.1mm wall thickness	125mm	
PE Pipe 140mm Ø, 3.9-5.8mm wall thickness	140mm	
PE Pipe 160mm Ø, 4.9-9.5mm wall thickness	160mm	

Appendix UL-EU CERTIFICATE

Max Aperture 600mm Wide x 600mm High
(Penetrations positioned as per option 1 or 2 below, 0mm distance between services and 50mm to edge of seal)
Collars secured both faces of the substrate utilising 80mm long steel pig tail screw through to Stopseal Fire Batt

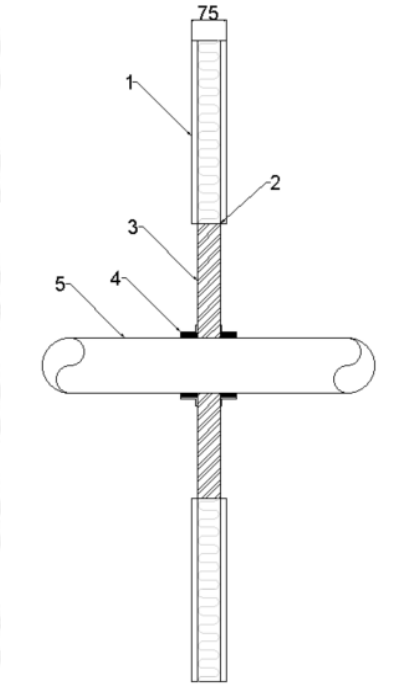

Key
1. Supporting construction
2. Pyrocoustic Sealant
3. Stopseal Batt
4. PipeBloc PCP
5. Penetration Service

Service(s)	PipeBloc PCP Ref	Classification
PP Pipe 32mm Ø, 2.9mm wall thickness	32mm	EI 60 U/C
PP Pipe 40mm Ø, 2.9mm wall thickness	40mm	
PP Pipe 50mm Ø, 2.9mm wall thickness	50mm	
PP Pipe 55mm Ø, 2.9-4.4mm wall thickness	55mm	
PP Pipe 63mm Ø, 2.9-4.4mm wall thickness	63mm	
PP Pipe 75mm Ø, 2.8-6.7mm wall thickness	75mm	
PP Pipe 82mm Ø, 2.8-6.7mm wall thickness	82mm	
PP Pipe 90mm Ø, 2.7-10mm wall thickness	90mm	
PP Pipe 100mm Ø, 2.7-10mm wall thickness	100mm	
PP Pipe 110mm Ø, 2.7-10mm wall thickness	110mm	
PP Pipe 125mm Ø, 3.1mm wall thickness	125mm	
PP Pipe 140mm Ø, 3.5-8mm wall thickness	140mm	
PP Pipe 160mm Ø, 4-14.6mm wall thickness	160mm	

Appendix UL-EU CERTIFICATE

Flexible Walls Minimum Thickness 100mm

Double Layer Stopseal Fire Batt 50mm, Electrical Cables and Conduits

Max Aperture 2600mm Wide x 2600mm High

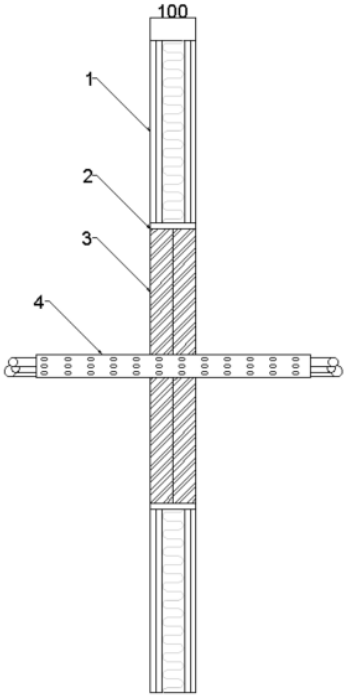

Key
1. Supporting construction
2. Pyrocoustic Sealant
3. Stopseal Batt
4. Penetration Service

Service(s)	Classification
Electrical cables 0mm to 21mm dia	EI 60
Electrical cables 22mm to 50mm dia	E 60 EI 45
Electrical cables 51mm to 80mm dia	E 60 EI 30
Cable Trays and Ladders	E 60 EI 45
100 mm diameter bundle telecommunication cable type “F”	EI 60
Unsheathed electrical cables 0-24mm dia	
Steel or Copper Conduits up to 16mm	E 60 C/U
Plastic conduits up to 16mm	EI 60 C/U

Appendix UL-EU CERTIFICATE

Max Aperture 2600mm Wide x 2600mm High

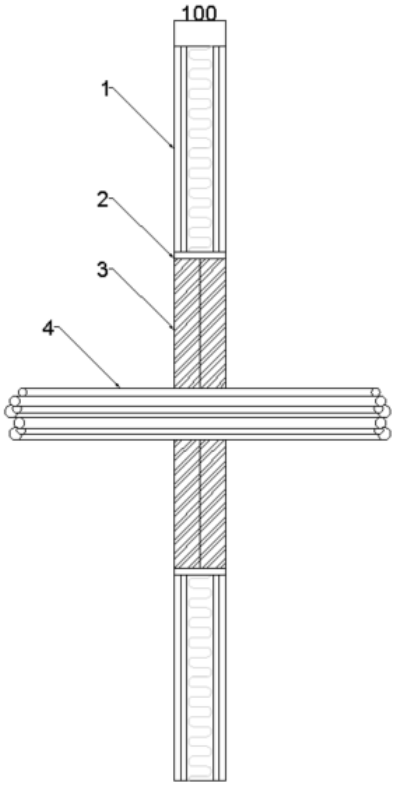

Key
1. Supporting construction
2. Pyrocoustic Sealant
3. Stopseal Batt
4. Penetration Service

Service(s)	Classification
Electrical cables up to 21mm dia	EI 60
Electrical cables 22mm to 80mm dia	E 60 EI 45
Cable Trays and Ladders	EI 60
100 mm diameter bundle telecommunication cable type “F”	EI 60
Unsheathed electrical cables up to 17mm dia	E 60 EI 30
Unsheathed electrical cables 18-24mm dia	E 60 EI 15
Steel or Copper Conduits up to 16mm	E 60 EI 15
Plastic conduits up to 16mm	EI 60

Appendix UL-EU CERTIFICATE

Max Aperture 2600mm Wide x 2600mm High	
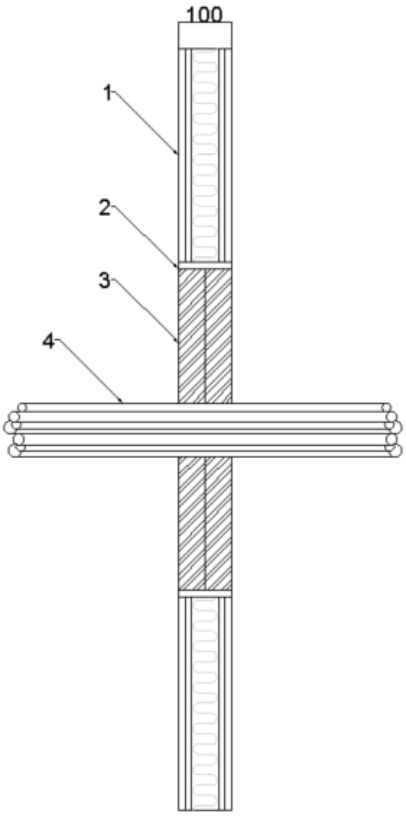	Key 1. Supporting construction 2. Pyrocoustic Sealant 3. Stopseal Batt 4. Penetration Service
Service(s)	**Classification**
Electrical cables up to 21mm dia	EI 60
Electrical cables 22mm to 80mm dia	E 60 EI 45
Cable Trays and Ladders	EI 60
100 mm diameter bundle telecommunication cable type “F”	EI 60
Unsheathed electrical cables up to 17mm dia	E 60 EI 30
Unsheathed electrical cables 18-24mm dia	E 60 EI 15
Steel or Copper Conduits up to 16mm	E 60 EI 15
Plastic conduits up to 16mm	EI 60

Appendix UL-EU CERTIFICATE

Double Layer Stopseal Fire Batt 50mm, Insulated Metallic Pipes

Max Aperture 730mm Wide x 1200mm High	
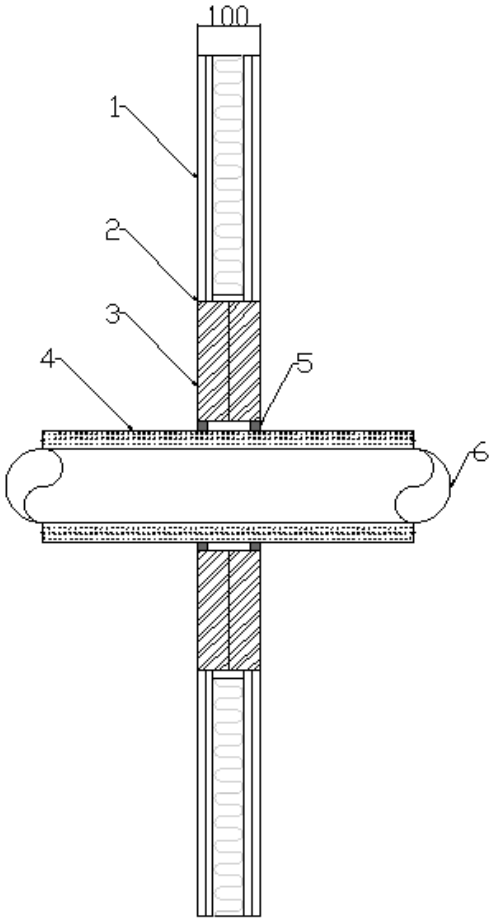	Key 1. Supporting construction 2. Pyrocoustic Sealant 3. Stopseal Batt 4. Insulation 5. Pyropro HPE 6. Penetration Service
Service(s)	**Classification**
[1]Single copper or mild steel pipe 40mm diameter and 1.5 – 14.2 mm wall with sustained/continuous 20mm thick foil faced glass wool insulation (min 80Kg/m^3)	E 90 U/C EI 60 U/C
[1]Single copper or mild steel pipe 40-159mm diameter and 2.3 – 14.2 mm wall with sustained/continuous 30mm thick foil faced glass wool insulation (min 80Kg/m^3)	EI 60 U/C

[1]15mm deep x 15mm wide annulus Pyropro HPE Sealant to both faces of the pipe

Appendix UL-EU CERTIFICATE

Max Aperture 2600mm Wide x 2600mm High

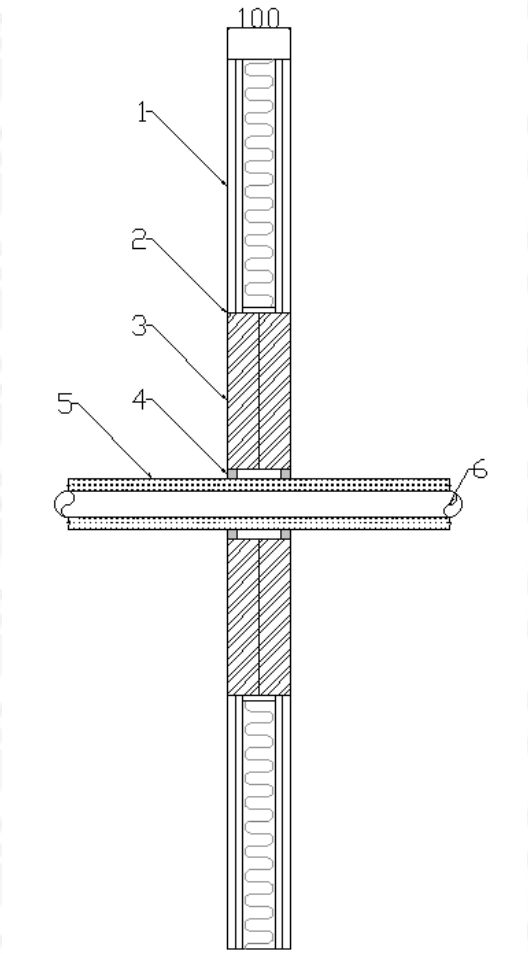

Key
1. Supporting construction
2. Pyrocoustic Sealant
3. Stopseal Batt
4. Pyropro HPE
5. Insulation
6. Penetration Service

Service(s)	Classification
[1]Single copper or mild steel pipe 40mm diameter and 1.5 – 14.2 mm wall with sustained/continuous 20mm thick foil faced glass wool insulation (min 80Kg/m^3)	EI 60 U/C
[1]Single copper or mild steel pipe 40-159mm diameter and 2.3 – 14.2 mm wall with sustained/continuous 30mm thick foil faced glass wool insulation (min 80Kg/m^3)	EI 60 U/C

[1]15mm deep x 15mm wide annulus Pyropro HPE Sealant to both faces of the pipe

Appendix UL-EU CERTIFICATE

Max Aperture 730mm Wide x 1200mm High	
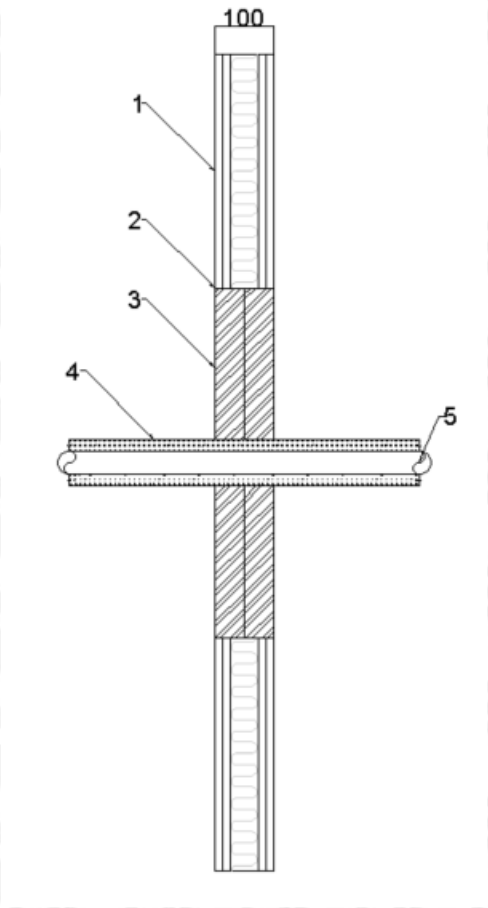	Key 1. Supporting construction 2. Pyrocoustic Sealant 3. Stopseal Batt 4. Insulation 5. Penetration Service
Service(s)	**Classification**
Steel or Copper Pipe 42-159mm Ø, 1.0mm – 14.2mm wall thickness. 25mm thick foil faced glassfibre insulation min. 30kg/m^3 (C/S)	E 120 C/U EI 45 C/U
Steel or Copper Pipe 42mm Ø, 1mm – 14.2mm wall thickness. 25mm thick foil faced glassfibre insulation min. 30kg/m^3 (C/S)	E 120 C/U EI 60 C/U

Appendix UL-EU CERTIFICATE

Certificate No. UL-EU-00771-CPR
Page 92/157
Date of Issue 2015-04-19

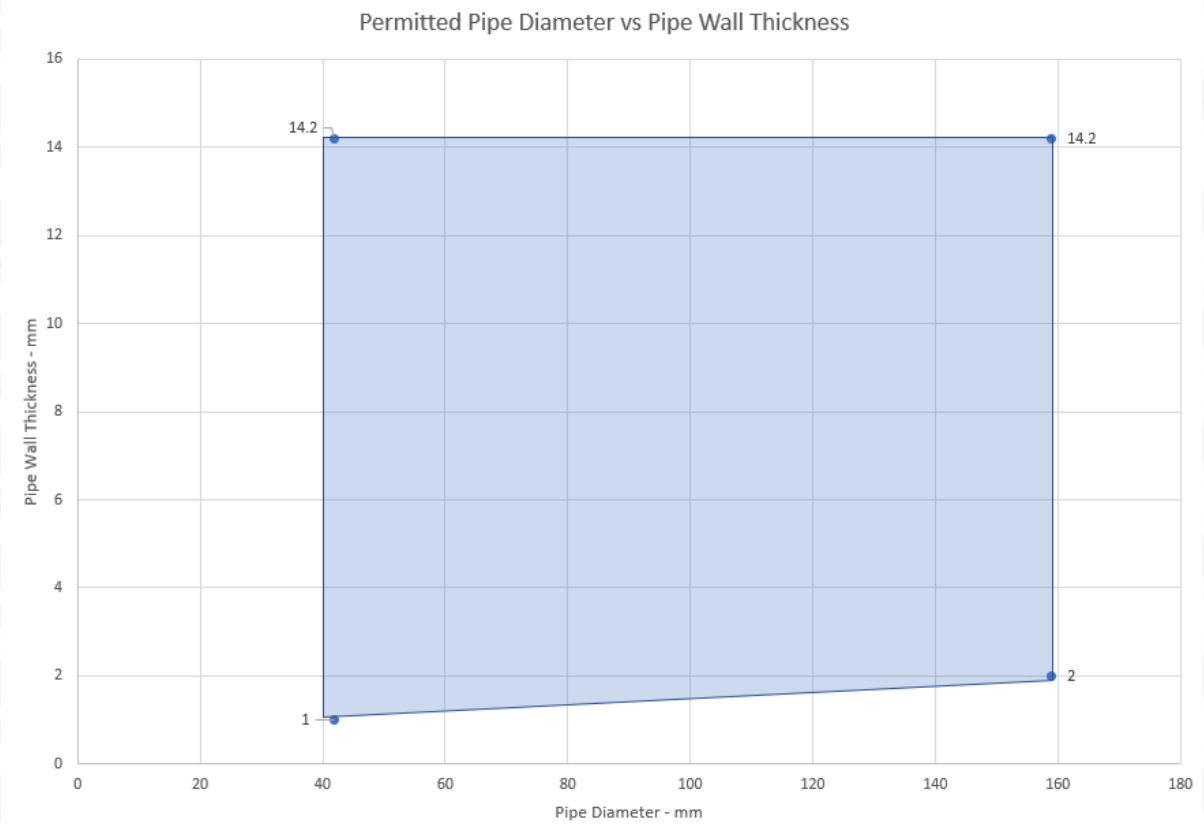

Appendix UL-EU CERTIFICATE

Certificate No. UL-EU-00771-CPR
Page 93/157
Date of Issue 2015-04-19

Max Aperture 2600mm Wide x 2600mm High	
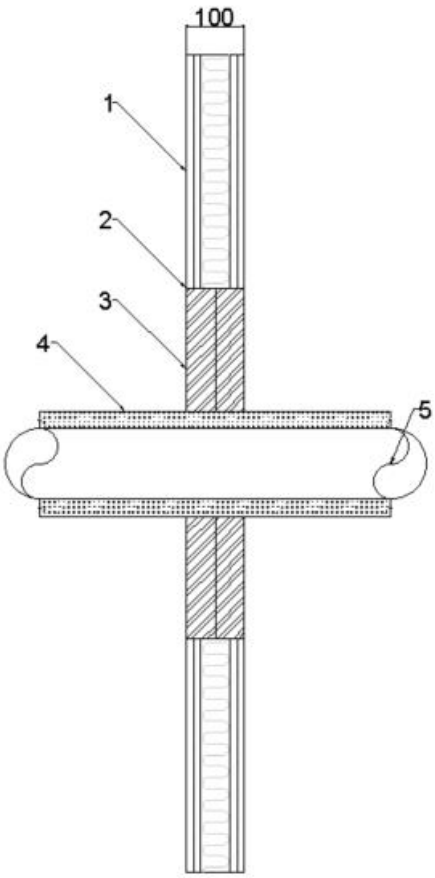	Key 1. Supporting construction 2. Pyrocoustic Sealant 3. Stopseal Batt 4. Insulation 5. Penetration Service
Service(s)	**Classification**
Steel or Copper Pipe 42-159mm Ø, 1.0mm – 14.2mm wall thickness. 25mm thick foil faced glassfibre insulation min. 30kg/m^3 (C/S)	E 60 C/U EI 45 C/U
Steel or Copper Pipe 42mm Ø, 1mm – 14.2mm wall thickness. 25mm thick foil faced glassfibre insulation min. 30kg/m^3 (C/S)	E 60 C/U EI 60 C/U

Appendix UL-EU CERTIFICATE

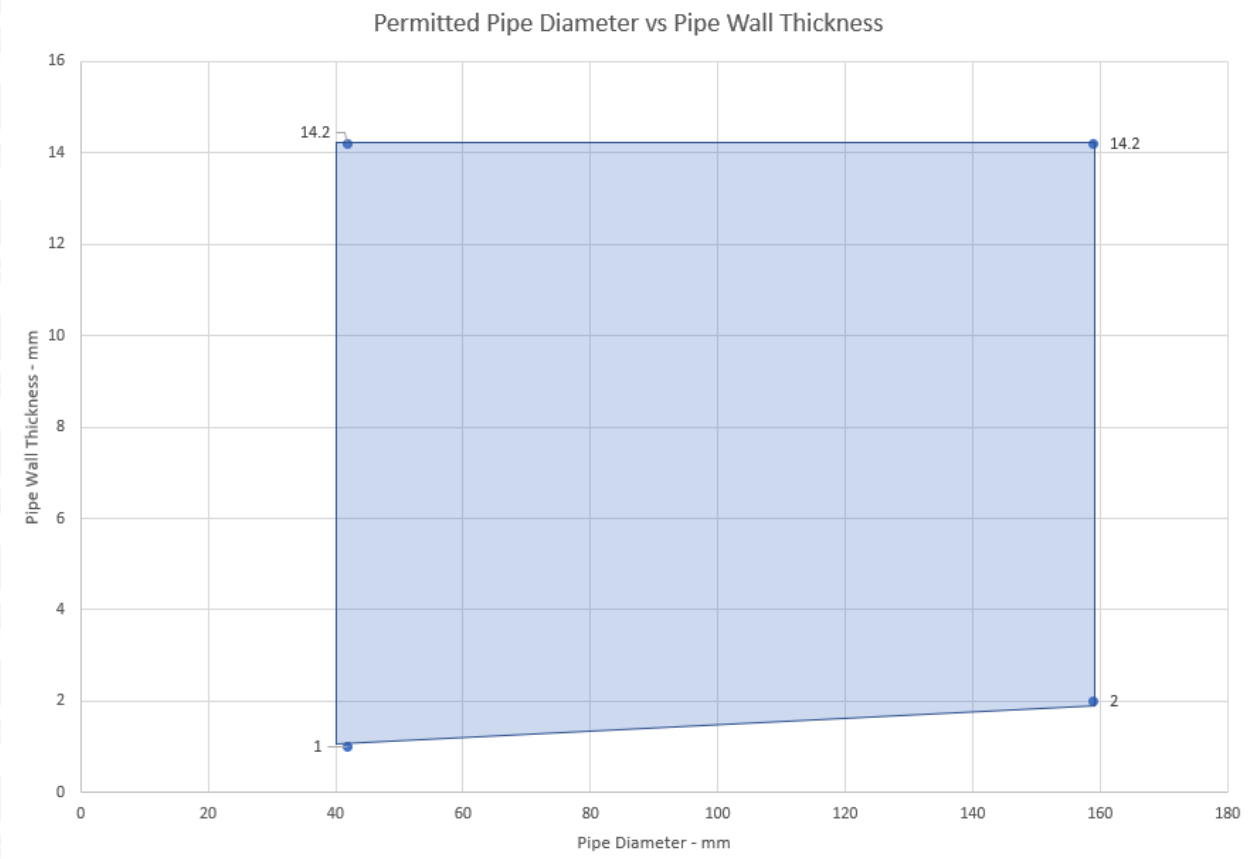

Appendix UL-EU CERTIFICATE

Max Aperture 730mm Wide x 1200mm High
(Penetrations positioned as per option 1 or 2 below, 0mm distance between services and 50mm to edge of seal)

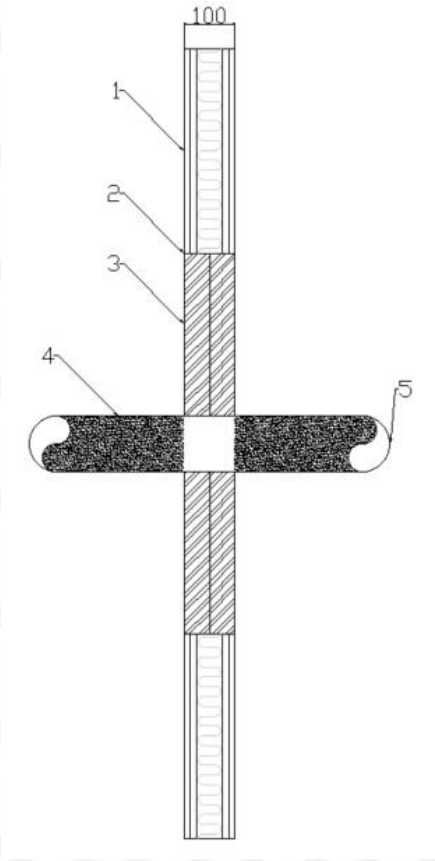

Key
1. Supporting construction
2. Pyrocoustic Sealant
3. Stopseal Batt
4. PST Coating
5. Penetration Service

Service(s)	Classification
Steel or Copper Pipe 42-159mm Ø, 1.0mm – 14.2mm wall thickness 40mm thick foil faced stonewool insulation min. 40kg/m^3 (L/I 400mm)	EI 45 C/U
Steel 42-324mm Ø, 16mm wall thickness. 40mm thick foil faced stonewool insulation min. 40kg/m^3 (L/I 400mm)	EI 45 C/U
Steel 42-324mm Ø, 16mm wall thickness. 40mm thick foil faced stonewool insulation min. 40kg/m^3 (C/I)	EI 60 C/U
Steel or Copper Pipe 42mm Ø, 1.0mm – 14.2mm wall thickness FSi PST coating along the penetration 2mm DFT (L/I 300mm)	E 120 C/U EI 45 C/U
Steel or Copper Pipe 42-159mm Ø, 1.0mm – 14.2mm wall thickness FSi PST coating along the penetration 2mm DFT (L/I 300mm)	E 120 C/U EI 20 C/U
Steel 42-324mm Ø, 16mm wall thickness. 14.2mm wall thickness FSi PST coating along the penetration 2mm DFT (L/I 300mm)	E 120 C/U EI 45 C/U

Appendix UL-EU CERTIFICATE

Certificate No. UL-EU-00771-CPR
Page 96/157
Date of Issue 2015-04-19

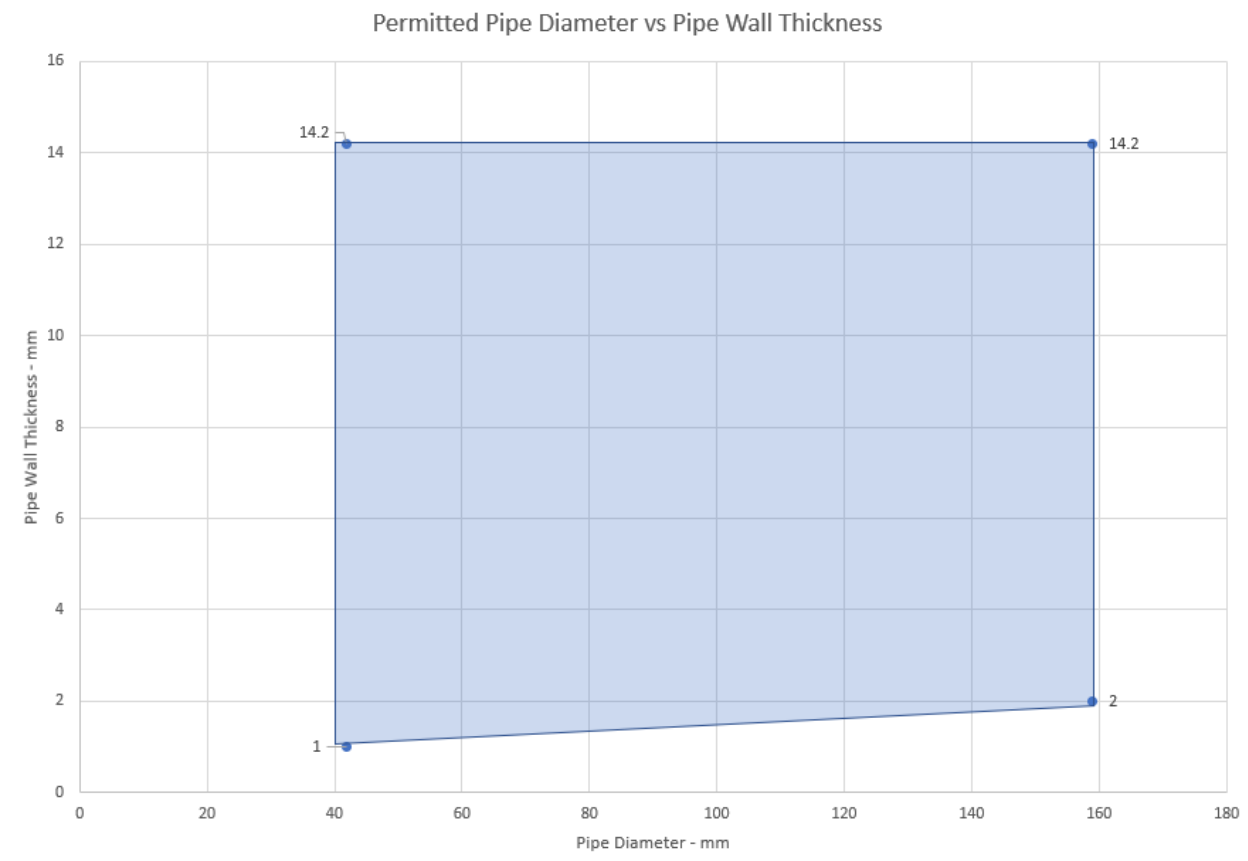

Appendix UL-EU CERTIFICATE

Max Aperture 2600mm Wide x 2600mm High
(Penetrations positioned as per option 1 or 2 below, 0mm distance between services and 50mm to edge of seal)

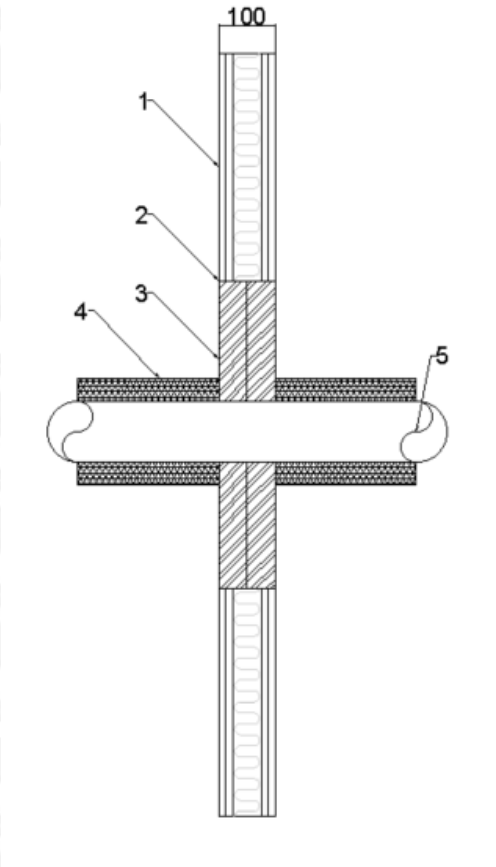

Key
1. Supporting construction
2. Pyrocoustic Sealant
3. Stopseal Batt
4. Insulation
5. Penetration Service

Service(s)	Classification
Steel or Copper Pipe 42-159mm Ø, 1.0mm – 14.2mm wall thickness 40mm thick foil faced stonewool insulation min. 40kg/m^3 (L/I 400mm)	EI 45 C/U
Steel 42-324mm Ø, 16mm wall thickness. 40mm thick foil faced stonewool insulation min. 40kg/m^3 (L/I 400mm)	EI 45 C/U
Steel 42-324mm Ø, 16mm wall thickness. 40mm thick foil faced stonewool insulation min. 40kg/m^3 (C/I)	EI 60 C/U
Steel or Copper Pipe 42mm Ø, 1.2mm – 14.2mm wall thickness FSi PST coating along the penetration 2mm DFT (L/I 300mm)	E 60 C/U EI 45 C/U
Steel or Copper Pipe 42-159mm Ø, 1.0mm – 14.2mm wall thickness FSi PST coating along the penetration 2mm DFT (L/I 300mm)	E 60 C/U EI 20 C/U
Steel 42-324mm Ø, 16mm wall thickness. 14.2mm wall thickness FSi PST coating along the penetration 2mm DFT (L/I 300mm)	E 60 C/U EI 45 C/U

Appendix UL-EU CERTIFICATE

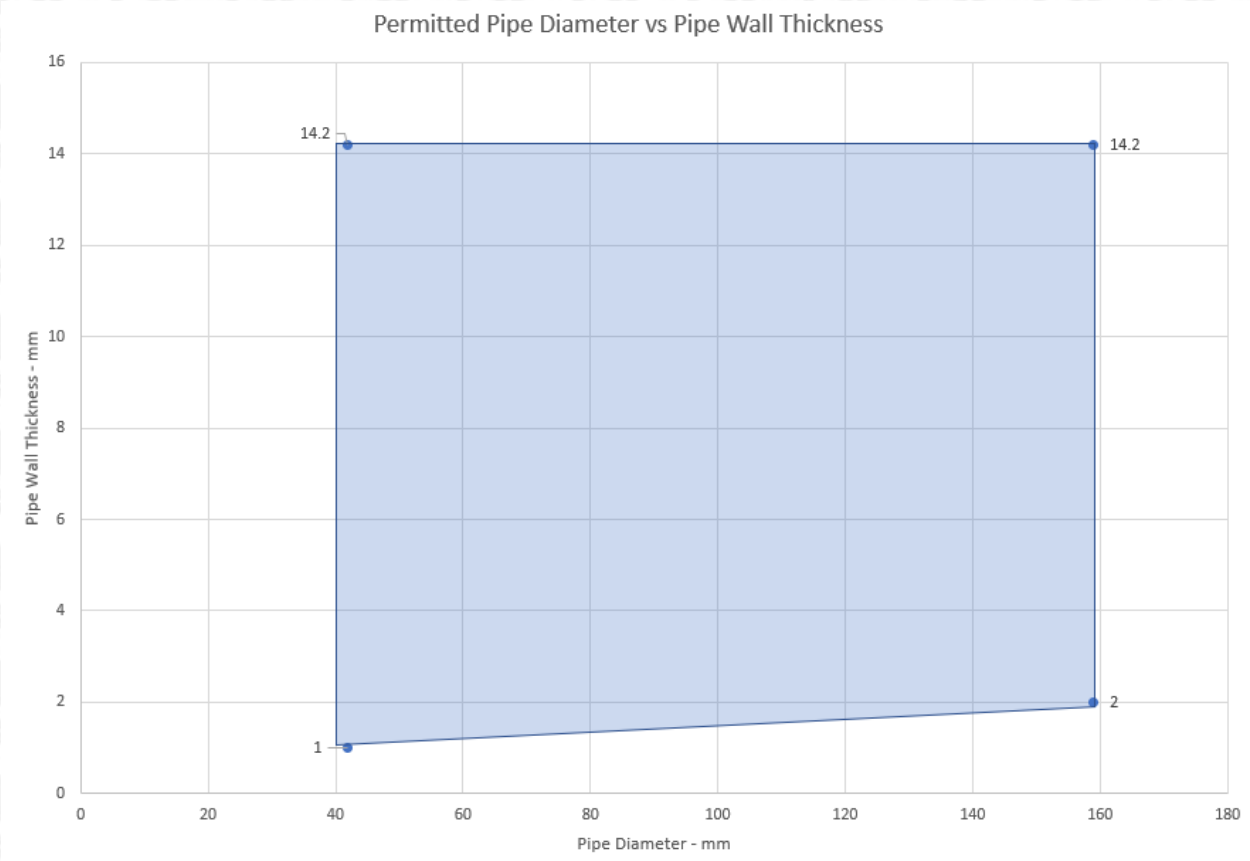

Appendix UL-EU CERTIFICATE

Certificate No. UL-EU-00771-CPR
Page 99/157
Date of Issue 2015-04-19

Max Aperture 730mm Wide x 1200mm High

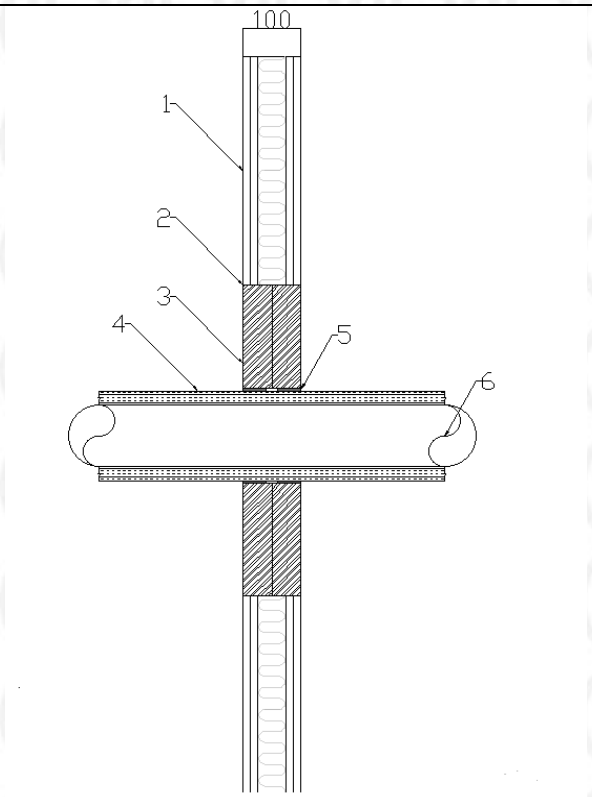

Key
1. Supporting construction
2. Pyrocoustic Sealant
3. Stopseal Batt
4. Insulation
5. PipeBloc EL / PipeBloc PWP
6. Penetration Service

Service(s)	Classification
[1]Steel or Copper Pipe 42-159mm Ø, 1.2mm – 14.2mm wall thickness. 13-25mm thick K Flex ST[2] Insulation (C/S)	E 120 C/U EI 60 C/U
[1]Steel or Copper Pipe 42mm Ø, 1 – 14.2mm wall thickness. 25-13mm thick K Flex ST[2] insulation (C/S)	E 120 C/U EI 90 C/U
[1]Steel or Copper Pipe 42-108mm Ø, 1.2 – 14.2mm wall thickness. 25 -40mm thick Kingspan Kooltherm FM3 insulation (C/S)	E 120 C/U EI 60 C/U
[1]Steel or Copper Pipe 42mm Ø, 1–14.2mm wall thickness. 25 -40mm thick Kingspan Kooltherm FM[3] insulation (C/S)	E 120 C/U EI 90 C/U
[1]Steel or Copper Pipe 42mm Ø, 1.0–14.2mm wall thickness. 50mm thick glassfibre insulation (C/S)	E 120 C/U EI 90 C/U

[1]2 x 2mm thick layers of PipeBloc EL / PipeBloc PWP installed both sides of the Stopseal Fire Batt
[2]Or equivalent elastomeric pipe insulation classified BL – s2, d0 or better to EN 13501-1
[3]Or equivalent Phenloic foam pipe insulation classified BL – s1, d0 or better to EN 13501-1

Appendix UL-EU CERTIFICATE

Certificate No. UL-EU-00771-CPR
Page 100/157
Date of Issue 2015-04-19

Max Aperture 2600mm Wide x 2600mm High

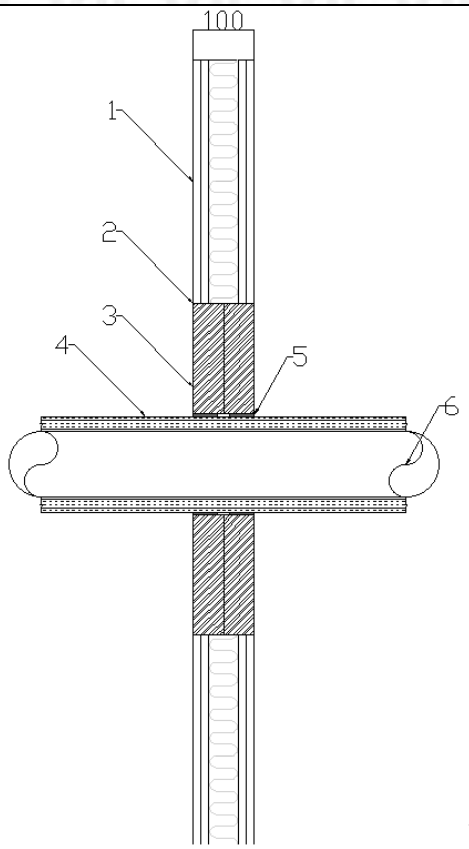

Key
1. Supporting construction
2. Pyrocoustic Sealant
3. Stopseal Batt
4. Insulation
5. PipeBloc EL / PipeBloc PWP
6. Penetration Service

Service(s)	Classification
[1]Steel or Copper Pipe 42-159mm Ø, 1.2mm – 14.2mm wall thickness. 13-25mm thick K Flex ST[2] Insulation (C/S)	EI 60 C/U
[1]Steel or Copper Pipe 42mm Ø, 1 – 14.2mm wall thickness. 25-13mm thick K Flex ST[2] insulation (C/S)	EI 60 C/U
[1]Steel or Copper Pipe 42-108mm Ø, 1.2 – 14.2mm wall thickness. 25 -40mm thick Kingspan Kooltherm FM[3] insulation (C/S)	EI 60 C/U
[1]Steel or Copper Pipe 42mm Ø, 1–14.2mm wall thickness. 25 -40mm thick Kingspan Kooltherm FM[3] insulation (C/S)	EI 60 C/U
[1]Steel or Copper Pipe 42mm Ø, 1.2–14.2mm wall thickness. 50mm thick glassfibre insulation (C/S)	EI 60 C/U

[1]2 x 2mm thick layers of PipeBloc EL / PipeBloc PWP installed both sides of the Stopseal Fire Batt
[2]Or equivalent elastomeric pipe insulation classified BL – s2, d0 or better to EN 13501-1
[3]Or equivalent Phenloic foam pipe insulation classified BL – s1, d0 or better to EN 13501-1

Appendix UL-EU CERTIFICATE

Max Aperture 730mm Wide x 1200mm High	
Zero distance to bottom of seal 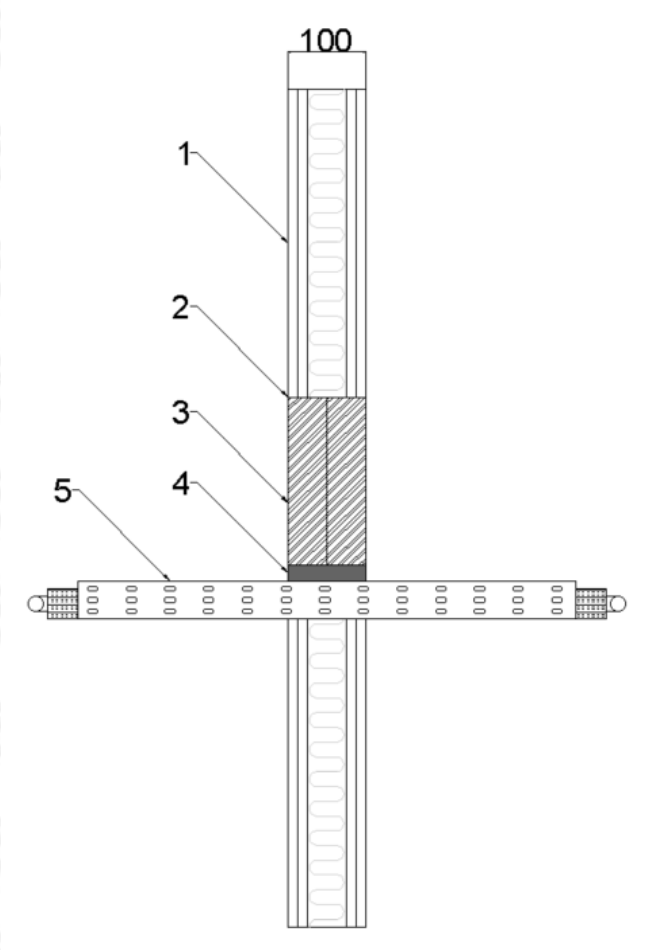 	Key 1. Supporting construction 2. Pyrocoustic Sealant 3. Stopseal Batt 4. Pyropro HPE 5. Penetration Service
Service(s)	**Classification**
[1] 6 off Steel or Copper Pipe 22mm Ø, 0.9mm – 14.2mm wall thickness. 19mm thick Armaflex[2] (L/S 400mm)	EI 90 C/U
[1]500mm steel cable tray	E 90 EI 15

[1]Pyropro HPE 20mm annulus full 50mm depth of the Stopseal Coated Batt
[2]Or equivalent elastomeric pipe insulation classified BL – s2, d0 or better to EN 13501-1

Appendix UL-EU CERTIFICATE

Max Aperture 2600mm Wide x 2600mm High	
Zero distance to bottom of seal 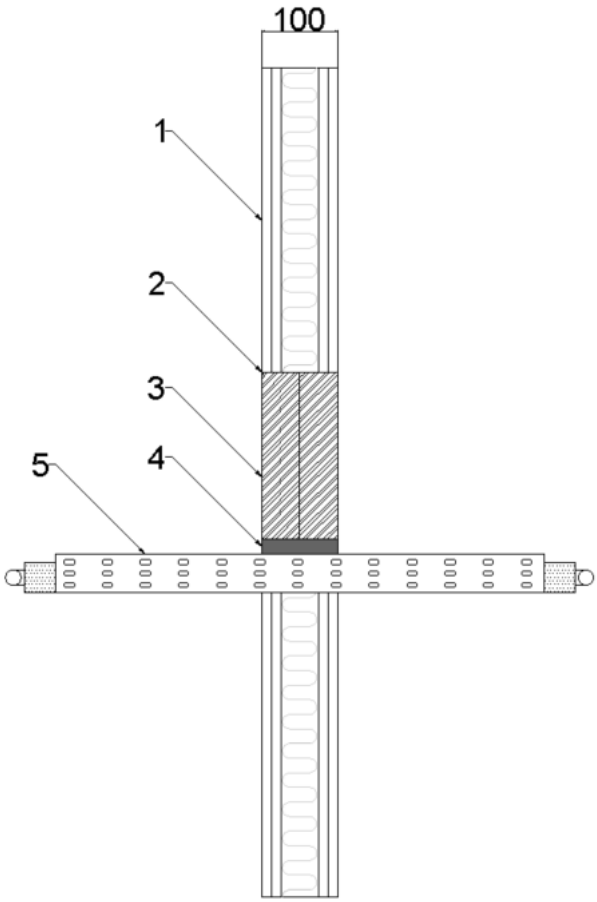	Key 1. Supporting construction 2. Pyrocoustic Sealant 3. Stopseal Batt 4. Pyropro HPE 5. Penetration Service
Service(s)	**Classification**
[1] 6 off Steel or Copper Pipe 22mm Ø, 0.9mm – 14.2mm wall thickness. 19mm thick Armaflex[2] (L/S 400mm)	EI 60 C/U
[1]500mm steel cable tray	E 60 EI 15

[1]Pyropro HPE 20mm annulus full 50mm depth of the Stopseal Coated Batt
[2]Or equivalent elastomeric pipe insulation classified BL – s2, d0 or better to EN 13501-1

Appendix UL-EU CERTIFICATE

Certificate No. UL-EU-00771-CPR
Page 103/157
Date of Issue 2015-04-19

Double Layer Stopseal Fire Batt 50mm, Plastic Pipes

Max Aperture 730mm Wide x 1200mm High
(Penetrations positioned as per option 1 or 2 below, 0mm distance between services and 50mm to edge of seal)
Collars secured both faces of the substrate utilising 80mm long steel pig tail screw through to Stopseal Fire Batt

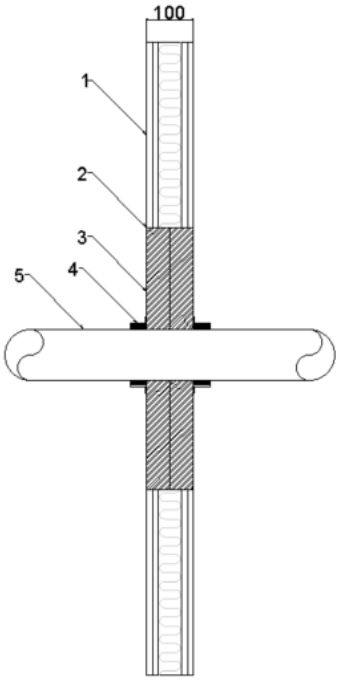

Key
1. Supporting construction
2. Pyrocoustic Sealant
3. Stopseal Batt
4. PipeBloc PCP
5. Penetration Service

Service(s)	PipeBloc PCP Ref	Classification
PVC Pipe 32mm Ø, 1.8mm wall thickness	32mm	EI 120 U/C
PVC Pipe 40mm Ø, 1.8mm wall thickness	40mm	
PVC Pipe 50mm Ø, 1.8mm wall thickness	50mm	
PVC Pipe 55mm Ø, 1.8-2.3mm wall thickness	55mm	
PVC Pipe 63mm Ø, 2.3-3mm wall thickness	63mm	
PVC Pipe 75mm Ø, 3.1-4.8mm wall thickness	75mm	
PVC Pipe 82mm Ø, 3.1-4.8mm wall thickness	82mm	
PVC Pipe 90mm Ø, 4.2-7.4mm wall thickness	90mm	
PVC Pipe 100mm Ø, 4.2-7.4mm wall thickness	100mm	
PVC Pipe 110mm Ø, 4.2-7.4mm wall thickness	110mm	
PVC Pipe 125mm Ø, 6mm wall thickness	125mm	
PVC Pipe 140mm Ø, 6.1-7.5mm wall thickness	140mm	

Appendix UL-EU CERTIFICATE

Max Aperture 2600mm Wide x 2600mm High
(Penetrations positioned as per option 1 or 2 below, 0mm distance between services and 50mm to edge of seal)
Collars secured both faces of the substrate utilising 80mm long steel pig tail screw through to Stopseal Fire Batt

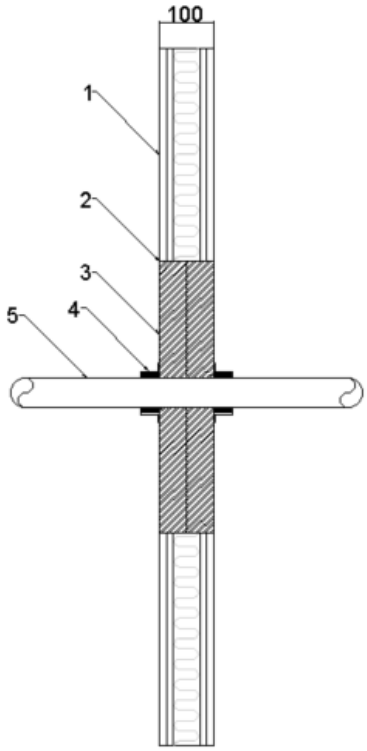

Key
1. Supporting construction
2. Pyrocoustic Sealant
3. Stopseal Batt
4. PipeBloc PCP
5. Penetration Service

Service(s)	PipeBloc PCP Ref	Classification
PVC Pipe 32mm Ø, 1.8mm wall thickness	32mm	EI 60 U/C
PVC Pipe 40mm Ø, 1.8mm wall thickness	40mm	
PVC Pipe 50mm Ø, 1.8mm wall thickness	50mm	
PVC Pipe 55mm Ø, 1.8-2.3mm wall thickness	55mm	
PVC Pipe 63mm Ø, 2.3-3mm wall thickness	63mm	
PVC Pipe 75mm Ø, 3.1-4.8mm wall thickness	75mm	
PVC Pipe 82mm Ø, 3.1-4.8mm wall thickness	82mm	
PVC Pipe 90mm Ø, 4.2-7.4mm wall thickness	90mm	
PVC Pipe 100mm Ø, 4.2-7.4mm wall thickness	100mm	
PVC Pipe 110mm Ø, 4.2-7.4mm wall thickness	110mm	
PVC Pipe 125mm Ø, 6mm wall thickness	125mm	
PVC Pipe 140mm Ø, 6.1-7.5mm wall thickness	140mm	
PVC Pipe 160mm Ø, 6.2-9.5mm wall thickness	160mm	

Appendix UL-EU CERTIFICATE

Max Aperture 730mm Wide x 1200mm High
(Penetrations positioned as per option 1 or 2 below, 0mm distance between services and 50mm to edge of seal)
Collars secured both faces of the substrate utilising 80mm long steel pig tail screw through to Stopseal Fire Batt

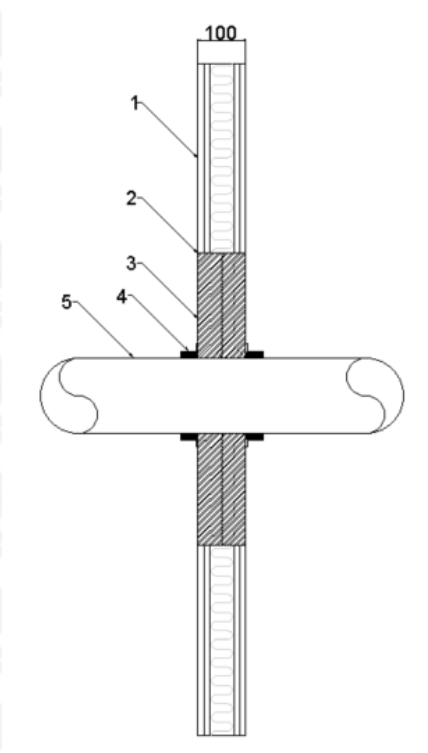

Key
1. Supporting construction
2. Pyrocoustic Sealant
3. Stopseal Batt
4. PipeBloc PCP
5. Penetration Service

Service(s)	PipeBloc PCP Ref	Classification
PP Pipe 32mm Ø, 2.9mm wall thickness	32mm	EI 120 U/C
PP Pipe 40mm Ø, 2.9mm wall thickness	40mm	
PP Pipe 50mm Ø, 2.9mm wall thickness	50mm	
PP Pipe 55mm Ø, 2.9-4.4mm wall thickness	55mm	
PP Pipe 63mm Ø, 2.9-4.4mm wall thickness	63mm	
PP Pipe 75mm Ø, 2.8-6.7mm wall thickness	75mm	
PP Pipe 82mm Ø, 2.8-6.7mm wall thickness	82mm	
PP Pipe 90mm Ø, 2.7-10mm wall thickness	90mm	
PP Pipe 100mm Ø, 2.7-10mm wall thickness	100mm	
PP Pipe 110mm Ø, 2.7-10mm wall thickness	110mm	
PP Pipe 125mm Ø, 3.1mm wall thickness	125mm	
PP Pipe 140mm Ø, 3.5-8mm wall thickness	140mm	
PP Pipe 160mm Ø, 4-14.6mm wall thickness	160mm	

Appendix UL-EU CERTIFICATE

Max Aperture 2600mm Wide x 2600mm High
(Penetrations positioned as per option 1 or 2 below, 0mm distance between services and 50mm to edge of seal)
Collars secured both faces of the substrate utilising 80mm long steel pig tail screw through to Stopseal Fire Batt

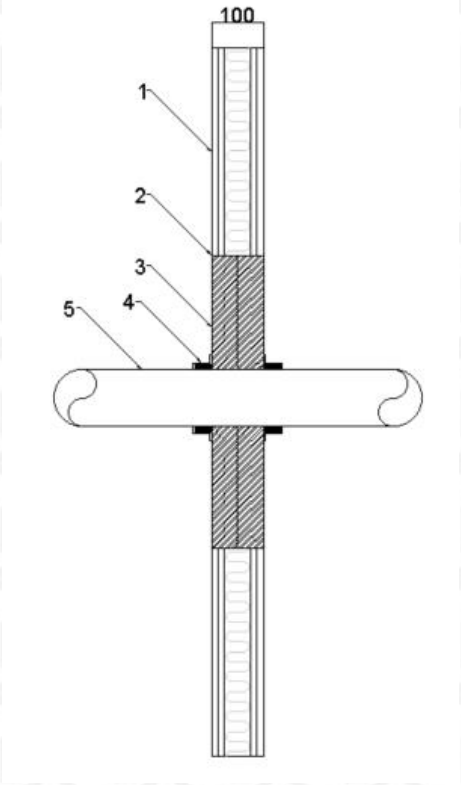

Key
1. Supporting construction
2. Pyrocoustic Sealant
3. Stopseal Batt
4. PipeBloc PCP
5. Penetration Service

Service(s)	PipeBloc PCP Ref	Classification
PP Pipe 32mm Ø, 2.9mm wall thickness	32mm	EI 60 U/C
PP Pipe 40mm Ø, 2.9mm wall thickness	40mm	
PP Pipe 50mm Ø, 2.9mm wall thickness	50mm	
PP Pipe 55mm Ø, 2.9-4.4mm wall thickness	55mm	
PP Pipe 63mm Ø, 2.9-4.4mm wall thickness	63mm	
PP Pipe 75mm Ø, 2.8-6.7mm wall thickness	75mm	
PP Pipe 82mm Ø, 2.8-6.7mm wall thickness	82mm	
PP Pipe 90mm Ø, 2.7-10mm wall thickness	90mm	
PP Pipe 100mm Ø, 2.7-10mm wall thickness	100mm	
PP Pipe 110mm Ø, 2.7-10mm wall thickness	110mm	
PP Pipe 125mm Ø, 3.1mm wall thickness	125mm	
PP Pipe 140mm Ø, 3.5-8mm wall thickness	140mm	
PP Pipe 160mm Ø, 4-14.6mm wall thickness	160mm	

Appendix UL-EU CERTIFICATE

Max Aperture 730mm Wide x 1200mm High
(Penetrations positioned as per option 1 or 2 below, 0mm distance between services and 50mm to edge of seal)
Collars secured both faces of the substrate utilising 80mm long steel pig tail screw through to Stopseal Fire Batt

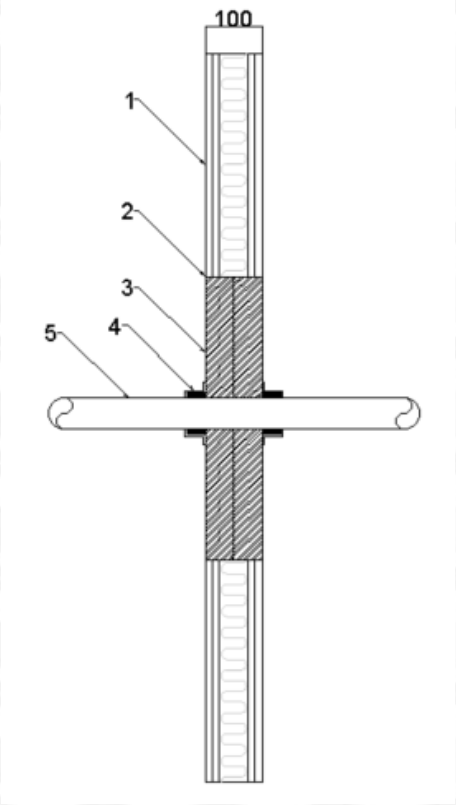

Key
1. Supporting construction
2. Pyrocoustic Sealant
3. Stopseal Batt
4. PipeBloc PCP
5. Penetration Service

Service(s)	PipeBloc PCP Ref	Classification
PE Pipe 32mm Ø, 2.9mm wall thickness	32mm	EI 120 U/C
PE Pipe 40mm Ø, 2.9mm wall thickness	40mm	
PE Pipe 50mm Ø, 2.9mm wall thickness	50mm	
PE Pipe 55mm Ø, 2.9-4.4mm wall thickness	55mm	
PE Pipe 63mm Ø, 2.9-4.4mm wall thickness	63mm	
PE Pipe 75mm Ø, 2.8-6.7mm wall thickness	75mm	
PE Pipe 82mm Ø, 2.8-6.7mm wall thickness	82mm	
PE Pipe 90mm Ø, 2.7-10mm wall thickness	90mm	
PE Pipe 100mm Ø, 2.7-10mm wall thickness	100mm	
PE Pipe 110mm Ø, 2.7-10mm wall thickness	110mm	
PE Pipe 125mm Ø, 3.1mm wall thickness	125mm	
PE Pipe 140mm Ø, 3.9-5.8mm wall thickness	140mm	
PE Pipe 160mm Ø, 4.9-9.5mm wall thickness	160mm	

Appendix UL-EU CERTIFICATE

Max Aperture 2600mm Wide x 2600mm High
(Penetrations positioned as per option 1 or 2 below, 0mm distance between services and 50mm to edge of seal)
Collars secured both faces of the substrate utilising 80mm long steel pig tail screw through to Stopseal Fire Batt

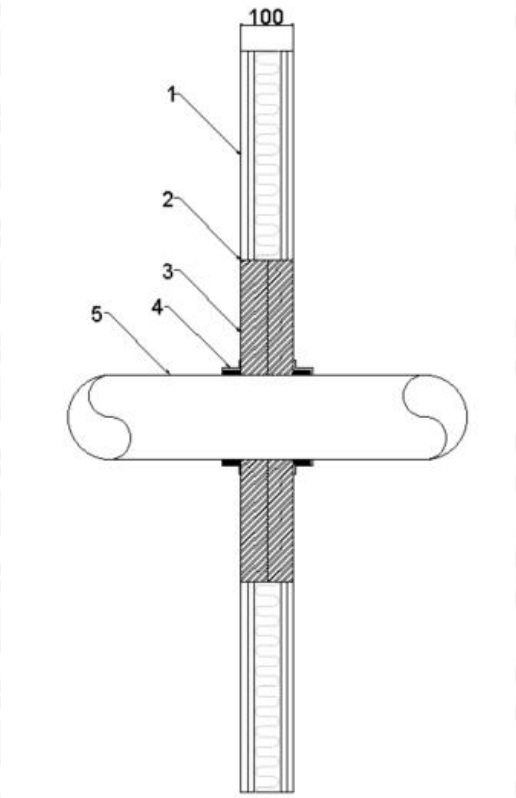

Key
1. Supporting construction
2. Pyrocoustic Sealant
3. Stopseal Batt
4. PipeBloc PCP
5. Penetration Service

Service(s)	PipeBloc PCP Ref	Classification
PE Pipe 32mm Ø, 2.9mm wall thickness	32mm	EI 60 U/C
PE Pipe 40mm Ø, 2.9mm wall thickness	40mm	
PE Pipe 50mm Ø, 2.9mm wall thickness	50mm	
PE Pipe 55mm Ø, 2.9-4.4mm wall thickness	55mm	
PE Pipe 63mm Ø, 2.9-4.4mm wall thickness	63mm	
PE Pipe 75mm Ø, 2.8-6.7mm wall thickness	75mm	
PE Pipe 82mm Ø, 2.8-6.7mm wall thickness	82mm	
PE Pipe 90mm Ø, 2.7-10mm wall thickness	90mm	
PE Pipe 100mm Ø, 2.7-10mm wall thickness	100mm	
PE Pipe 110mm Ø, 2.7-10mm wall thickness	110mm	
PE Pipe 125mm Ø, 3.1mm wall thickness	125mm	
PE Pipe 140mm Ø, 3.9-5.8mm wall thickness	140mm	
PE Pipe 160mm Ø, 4.9-9.5mm wall thickness	160mm	

Appendix UL-EU CERTIFICATE

Double Layer Stopseal Fire Batt 50mm, Insulated Plastic Pipes

Max Aperture 730mm Wide x 1200mm High
(Penetrations positioned as per option 1 or 2 below, 100mm distance between services and 50mm to edge of seal)

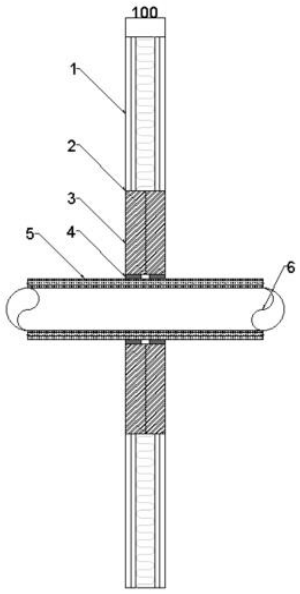

Key
1. Supporting construction
2. Pyrocoustic Sealant
3. Stopseal Batt
4. PipeBloc EL / PipeBloc PWP
5. Insulation
6. Penetration Service

Service(s)	PipeBloc EL / PipeBloc PWP Ref	Classification
PVC Pipe 40mm Ø, 1.9mm wall thickness. 25 mm thick Kingspan Kooltherm FM[3] insulation (C/S)	3 x 2mm thickness	E 120 U/C EI 90 U/C
PVC Pipe 40mm Ø, 3mm wall thickness. 15 mm thick Kingspan Kooltherm FM[3] insulation (C/S)	3 x 2mm thickness	
PVC Pipe 110mm Ø, 4.2mm wall thickness. 25 mm thick Kingspan Kooltherm FM[3] insulation (C/S)	5 x 2mm thickness	EI 120 U/C
PVC Pipe 110mm Ø, 6.6mm wall thickness. 20 mm thick Kingspan Kooltherm FM[3] insulation (C/S)	5 x 2mm thickness	E 120 U/C EI 90 U/C
PVC Pipe 40mm Ø, 1.9mm wall thickness. 32 mm thick Armacell Armaflex Class O[2] (C/S)	3 x 2mm thickness	EI 120 U/C
PVC Pipe 40mm Ø, 3mm wall thickness. 9 mm thick Armacell Armaflex Class O[2] (C/S)	3 x 2mm thickness	
PVC Pipe 110mm Ø, 4.2mm wall thickness. 32 mm thick Armacell Armaflex Class O[2] (C/S)	5 x 2mm thickness	EI 120 U/C
PVC Pipe 110mm Ø, 6.6mm wall thickness. 13 mm thick Armacell Armaflex Class O[2] (C/S)	5 x 2mm thickness	EI 120 U/C

[1]PipeBloc EL / PipeBloc PWP secured internally within both faces of the Stopseal Fire Batt
[2]Or equivalent elastomeric pipe insulation classified BL – s2, d0 or better to EN 13501-1
[3]Or equivalent Phenloic foam pipe insulation classified BL – s1, d0 or better to EN 13501-1

Appendix UL-EU CERTIFICATE

Max Aperture 2600mm Wide x 2600mm High
(Penetrations positioned as per option 1 or 2 below, 100mm distance between services and 50mm to edge of seal)

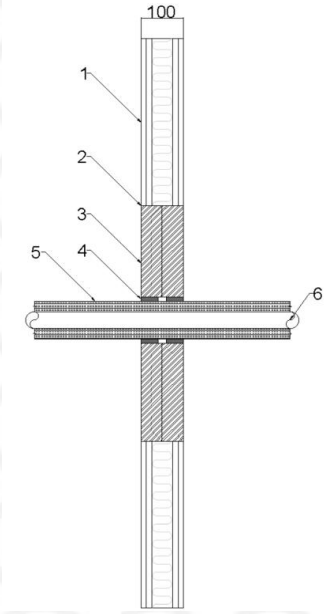

Key
1. Supporting construction
2. Pyrocoustic Sealant
3. Stopseal Batt
4. PipeBloc EL / PipeBloc PWP
5. Insulation
6. Penetration Service

Service(s)	PipeBloc EL / PipeBloc PWP Ref	Classification
PVC Pipe 40mm Ø, 1.9mm wall thickness. 25 mm thick Kingspan Kooltherm FM[3] insulation (C/S)	3 x 2mm thickness	EI 60 U/C
PVC Pipe 40mm Ø, 3mm wall thickness. 15 mm thick Kingspan Kooltherm FM[3] insulation (C/S)	3 x 2mm thickness	
PVC Pipe 110mm Ø, 4.2mm wall thickness. 25 mm thick Kingspan Kooltherm FM[3] insulation (C/S)	5 x 2mm thickness	EI 60 U/C
PVC Pipe 110mm Ø, 6.6mm wall thickness. 20 mm thick Kingspan Kooltherm FM[3] insulation (C/S)	5 x 2mm thickness	EI 60 U/C
PVC Pipe 40mm Ø, 1.9mm wall thickness. 32 mm thick Armacell Armaflex Class O[2] (C/S)	3 x 2mm thickness	EI 60 U/C
PVC Pipe 40mm Ø, 3mm wall thickness. 9 mm thick Armacell Armaflex Class O[2] (C/S)	3 x 2mm thickness	
PVC Pipe 110mm Ø, 4.2mm wall thickness. 32 mm thick Armacell Armaflex Class O[2] (C/S)	5 x 2mm thickness	EI 60 U/C
PVC Pipe 110mm Ø, 6.6mm wall thickness. 13 mm thick Armacell Armaflex Class O[2] (C/S)	5 x 2mm thickness	EI 60 U/C

[1]PipeBloc EL / PipeBloc PWP secured internally within both faces of the Stopseal Fire Batt
[2]Or equivalent elastomeric pipe insulation classified BL – s2, d0 or better to EN 13501-1
[3]Or equivalent Phenloic foam pipe insulation classified BL – s1, d0 or better to EN 13501-1

Appendix UL-EU CERTIFICATE

Certificate No. UL-EU-00771-CPR
Page 111/157
Date of Issue 2015-04-19

Single Layer Patress, Stopseal Fire Batt 50mm, Electrical Cables and Conduits

Max Aperture 730mm Wide x 1200mm High	
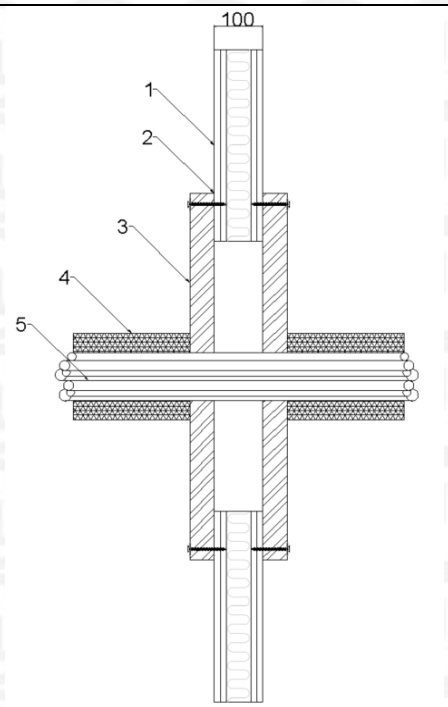	Key 1. Supporting construction 2. Pyrocoustic Sealant 3. Stopseal Batt 4. Insulation 5. Penetration Service

Service(s)	**Classification**
[2]Electrical cables up to 80mm Ø	EI 120
[2]Cable Trays and Ladders	
[2]100 mm diameter bundle telecommunication cable type "F"	
[2]Unsheathed electrical cables up to 24mm Ø	
[2]Steel or Copper Conduits up to 16mm Ø	
[2]Plastic conduits up to 16mm Ø	

[1]Patress installation of Stopseal Coated Batt. The Batts are installed in horizontal rows and fixed in minimum two vertical edges. Overlap of batts to substrate min 100mm. Batts mechanically fixed to substrate with min 6mm x 80mm steel screws and steel retaining washer. Fixings installed at max 300mm centres
[2]Cables and cable trays wrapped with a single layer of 40mm thick, 40kg/m^3 Stonewool (L/I 300mm)

Appendix UL-EU CERTIFICATE

Max Aperture 2600mm Wide x 2600mm High

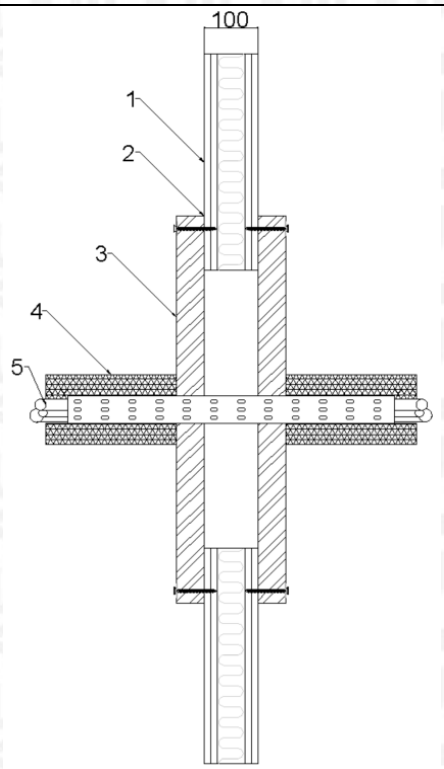

Key
1. Supporting construction
2. Pyrocoustic Sealant
3. Stopseal Batt
4. Insulation
5. Penetration Service

Service(s)	Classification
[2]Electrical cables upto 80mm Ø	EI 60
[2]Cable Trays and Ladders	
[2]100 mm diameter bundle telecommunication cable type "F"	
[2]Unsheathed electrical cables up to 24mm Ø	
[2]Steel or Copper Conduits up to 16mm Ø	
[2]Plastic conduits up to 16mm Ø	

[1]Patress installation of Stopseal Coated Batt. The Batts are installed in horizontal rows and fixed in minimum two vertical edges. Overlap of batts to substrate min 100mm. Batts mechanically fixed to substrate with min 6mm x 80mm steel screws and steel retaining washer. Fixings installed at max 300mm centres
[2]Cables and cable trays wrapped with a single layer of 40mm thick, 40kg/m^3 Stonewool (L/I 300mm)

Appendix UL-EU CERTIFICATE

Single Layer Patress, Stopseal Fire Batt 50mm, Insulated Metallic Pipes

Max Aperture 730mm Wide x 1200mm High	
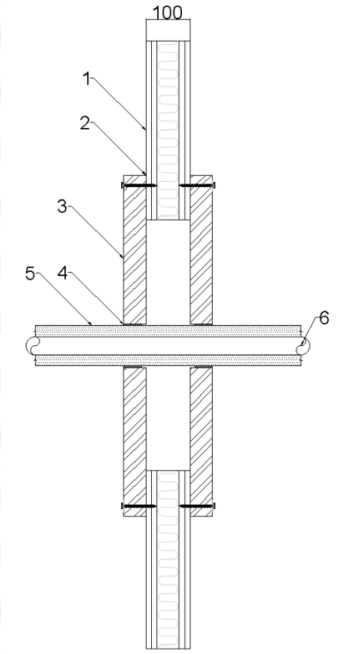	Key 1. Supporting construction 2. Pyrocoustic Sealant 3. Stopseal Batt 4. PipeBloc EL / PipeBloc PWP 5. Insulation 6. Penetration Service
Service(s)	**Classification**
[2]Steel or Copper Pipe 42-159mm Ø, 1.2mm – 14.2mm wall thickness. 13-25mm thick K Flex ST[3] Insulation (C/S)	E 120 C/U EI 60 C/U
[2]Steel or Copper Pipe 42mm Ø, 1.2 – 14.2mm wall thickness. 13-25mm thick K Flex ST[3] insulation (C/S)	E 120 C/U EI 90 C/U
[2]Steel or Copper Pipe 42-108mm Ø, 1.2 – 14.2mm wall thickness. 25 -40mm thick Kingspan Kooltherm FM[4] insulation (C/S)	E 120 C/U EI 60 C/U
[2]Steel or Copper Pipe 42mm Ø, 1.2–14.2mm wall thickness. 25 -40mm thick Kingspan Kooltherm FM[4] insulation (C/S)	E 120 C/U EI 90 C/U
[2]Steel or Copper Pipe 42mm Ø, 1.2–14.2mm wall thickness. 50mm thick glassfibre insulation min. 30kg/m^3 (C/S)	E 120 C/U EI 90 C/U

[1]Patress installation of Stopseal Coated Batt. The Batts are installed in horizontal rows and fixed in minimum two vertical edges. Overlap of batts to substrate min 100mm. Batts mechanically fixed to substrate with min 6mm x 80mm steel screws and steel retaining washer. Fixings installed at max 300mm centres.
[2]2 x 2mm thick layers of PipeBloc EL / PipeBloc PWP installed both sides of the substrate within the patress installation
[3]Or equivalent elastomeric pipe insulation classified BL – s2, d0 or better to EN 13501-1
[4]Or equivalent Phenloic foam pipe insulation classified BL – s1, d0 or better to EN 13501-1

Appendix UL-EU CERTIFICATE

Max Aperture 2600mm Wide x 2600mm High	
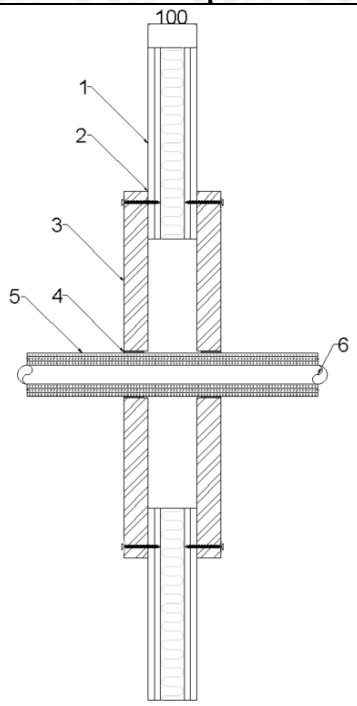	Key 1. Supporting construction 2. Pyrocoustic Sealant 3. Stopseal Batt 4. PipeBloc EL / PipeBloc PWP 5. Insulation 6. Penetration Service
Service(s)	**Classification**
[2]Steel or Copper Pipe 42-159mm Ø, 1.2mm – 14.2mm wall thickness. 13-25mm thick K Flex ST[3] Insulation (C/S)	EI 60 C/U
[2]Steel or Copper Pipe 42-159mm Ø, 1.2 – 14.2mm wall thickness. 25mm thick K Flex ST[3] insulation (C/S)	
[2]Steel or Copper Pipe 42mm Ø, 1 – 14.2mm wall thickness. 25-13mm thick K Flex ST[3] insulation (C/S)	
[2]Steel or Copper Pipe 42-108mm Ø, 1.2 – 14.2mm wall thickness. 25 -40mm thick Kingspan Kooltherm FM[4] insulation (C/S)	
[2]Steel or Copper Pipe 42mm Ø, 1–14.2mm wall thickness. 25 -40mm thick Kingspan Kooltherm FM[4] insulation (C/S)	
[2]Steel or Copper Pipe 42mm Ø, 1.2–14.2mm wall thickness. 50mm thick glassfibre insulation min. 30kg/m[3] (C/S)	

[1]Patress installation of Stopseal Coated Batt. The Batts are installed in horizontal rows and fixed in minimum two vertical edges. Overlap of batts to substrate min 100mm. Batts mechanically fixed to substrate with min 6mm x 80mm steel screws and steel retaining washer. Fixings installed at max 300mm centres.
[2]2 x 2mm thick layers of PipeBloc EL / PipeBloc PWP installed both sides of the substrate within the patress installation
[3]Or equivalent elastomeric pipe insulation classified BL – s2, d0 or better to EN 13501-1
[4]Or equivalent Phenloic foam pipe insulation classified BL – s1, d0 or better to EN 13501-1

Appendix UL-EU CERTIFICATE

Certificate No. UL-EU-00771-CPR
Page 115/157
Date of Issue 2015-04-19

Max Aperture 730mm Wide x 1200mm High	
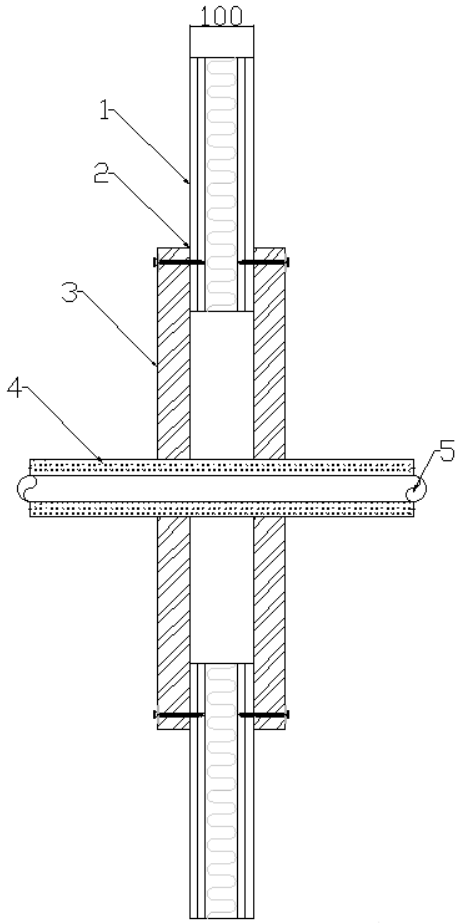	Key 1. Supporting construction 2. Pyrocoustic Sealant 3. Stopseal Batt 4. Insulation 5. Penetration Service
Service(s)	**Classification**
Steel or Copper Pipe 42-159mm Ø, 2mm – 14.2mm wall thickness. 25mm thick foil faced glassfibre insulation min. 30kg/m^3 (C/S)	E 120 C/U EI 45 C/U
Steel or Copper Pipe 42mm Ø, 1mm – 14.2mm wall thickness. 25mm thick foil faced glassfibre insulation min. 30kg/m^3 (C/S)	E 120 C/U EI 60 C/U

[1]Patress installation of Stopseal Coated Batt. The Batts are installed in horizontal rows and fixed in minimum two vertical edges. Overlap of batts to substrate min 100mm. Batts mechanically fixed to substrate with min 6mm x 80mm steel screws and steel retaining washer. Fixings installed at max 300mm centres.

Appendix UL-EU CERTIFICATE

Certificate No. UL-EU-00771-CPR
Page 116/157
Date of Issue 2015-04-19

Max Aperture 2600mm Wide x 2600mm High	
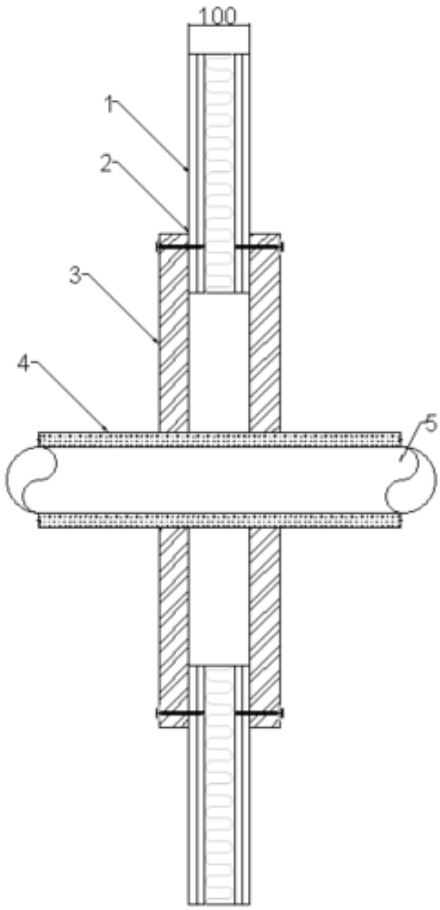	Key 1. Supporting construction 2. Pyrocoustic Sealant 3. Stopseal Batt 4. Insulation 5. Penetration Service
Service(s)	**Classification**
Steel or Copper Pipe 42-159mm Ø, 2mm – 14.2mm wall thickness. 25mm thick foil faced glassfibre insulation min. 30kg/m^3 (C/S)	E 60 C/U EI 45 C/U
Steel or Copper Pipe 42mm Ø, 1mm – 14.2mm wall thickness. 25mm thick foil faced glassfibre insulation min. 30kg/m^3 (C/S)	E 60 C/U EI 60 C/U

[1]Patress installation of Stopseal Coated Batt. The Batts are installed in horizontal rows and fixed in minimum two vertical edges. Overlap of batts to substrate min 100mm. Batts mechanically fixed to substrate with min 6mm x 80mm steel screws and steel retaining washer. Fixings installed at max 300mm centres.

Appendix UL-EU CERTIFICATE

Max Aperture 730mm Wide x 1200mm High	
30mm overlap patress installed flush to soffit 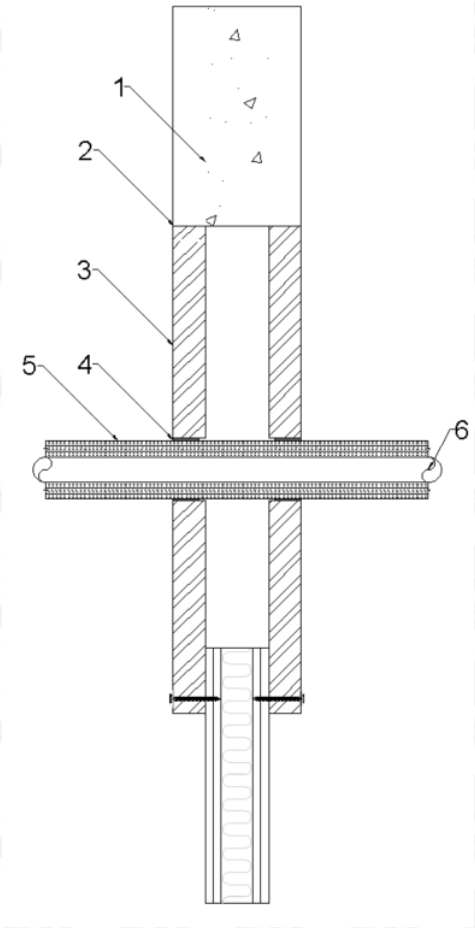 	Key 1. Supporting construction 2. Pyrocoustic Sealant 3. Stopseal Batt 4. PipeBloc EL / PipeBloc PWP 5. Insulation 6. Penetration Service
Service(s)	**Classification**
Steel or Copper Pipe 42mm Ø, 1.0mm – 14.2mm wall thickness. 50mm thick Kingspan[3] (C/S 400mm)	EI 60 C/U

[1]Patress installation of Stopseal Coated Batt. The Batts are installed in horizontal rows and fixed in minimum two vertical edges. Overlap of batts to substrate min 30mm. Batts mechanically fixed to substrate with min 6mm x 80mm steel screws and steel retaining washer. Fixings installed at max 300mm centres. No fixing is applied to the head flush to the soffit
[2]2 x 2mm thick layers of PipeBloc EL / PipeBloc PWP installed both sides of the substrate within the patress installation
[3]Or equivalent Phenloic foam pipe insulation classified BL – s1, d0 or better to EN 13501-1

Appendix UL-EU CERTIFICATE

Max Aperture 2600mm Wide x 2600mm High	
30mm overlap patress installed flush to soffit 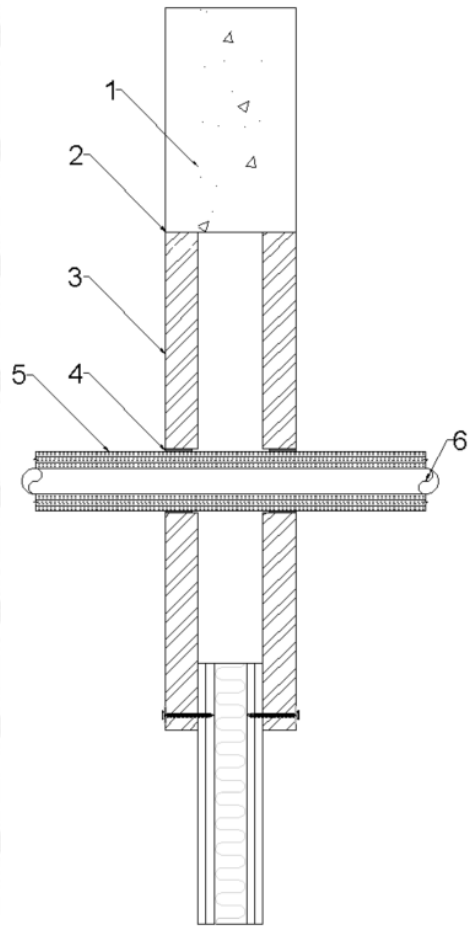 	Key 1. Supporting construction 2. Pyrocoustic Sealant 3. Stopseal Batt 4. PipeBloc EL / PipeBloc PWP 5. Insulation 6. Penetration Service
Service(s)	**Classification**
Steel or Copper Pipe 42mm Ø, 1.0mm – 14.2mm wall thickness. 50mm thick Kingspan[3] (C/S 400mm)	EI 60 C/U

[1]Patress installation of Stopseal Coated Batt. The Batts are installed in horizontal rows and fixed in minimum two vertical edges. Overlap of batts to substrate min 30mm. Batts mechanically fixed to substrate with min 6mm x 80mm steel screws and steel retaining washer. Fixings installed at max 300mm centres. No fixing is applied to the head flush to the soffit
[2]2 x 2mm thick layers of PipeBloc EL / PipeBloc PWP installed both sides of the substrate within the patress installation
[3]Or equivalent Phenloic foam pipe insulation classified BL – s1, d0 or better to EN 13501-1

Appendix UL-EU CERTIFICATE

Single Layer Patress, Stopseal Fire Batt 50mm, Plastic Pipes

Max Aperture 2600mm Wide x 2600mm High
(Penetrations positioned as per option 1 or 2 below, 0mm distance between services and 50mm to edge of seal)

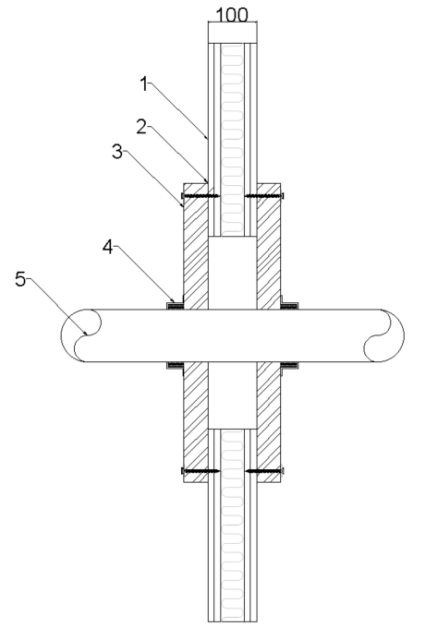

Key
1. Supporting construction
2. Pyrocoustic Sealant
3. Stopseal Batt
4. PipeBloc PCP
5. Penetration Service

Service(s)	PipeBloc PCP Ref	Classification
PVC Pipe 32mm Ø, 1.8mm wall thickness	32mm	EI 60 U/C
PVC Pipe 40mm Ø, 1.8mm wall thickness	40mm	
PVC Pipe 50mm Ø, 1.8mm wall thickness	50mm	
PVC Pipe 55mm Ø, 1.8-2.3mm wall thickness	55mm	
PVC Pipe 63mm Ø, 2.3-3mm wall thickness	63mm	
PVC Pipe 75mm Ø, 3.1-4.8mm wall thickness	75mm	
PVC Pipe 82mm Ø, 3.1-4.8mm wall thickness	82mm	
PVC Pipe 90mm Ø, 4.2-7.4mm wall thickness	90mm	
PVC Pipe 100mm Ø, 4.2-7.4mm wall thickness	100mm	
PVC Pipe 110mm Ø, 4.2-7.4mm wall thickness	110mm	
PVC Pipe 125mm Ø, 6mm wall thickness	125mm	
PVC Pipe 140mm Ø, 6.1-7.5mm wall thickness	140mm	
PVC Pipe 160mm Ø, 6.2-9.5mm wall thickness	160mm	

Collars secured both faces of the substrate utlising 80mm long pig tail screw through to the Stopseal Fire Batt
[1]Patress installation of Stopseal Coated Batt. The Batts are installed in horizontal rows and fixed in minimum two vertical edges. Overlap of batts to substrate min 100mm. Batts mechanically fixed to substrate with min 6mm x 80mm steel screws and steel retaining washer. Fixings installed at max 300mm centres.

Appendix UL-EU CERTIFICATE

Certificate No. UL-EU-00771-CPR
Page 120/157
Date of Issue 2015-04-19

Max Aperture 730mm Wide x 1200mm High
(Penetrations positioned as per option 1 or 2 below, 0mm distance between services and 50mm to edge of seal)

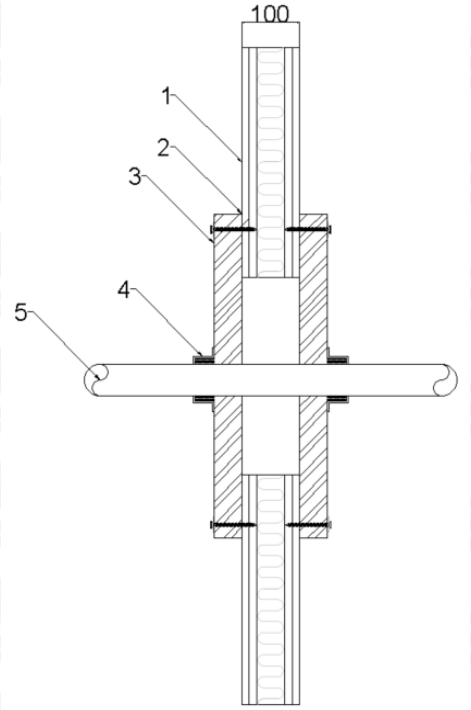

Key
1. Supporting construction
2. Pyrocoustic Sealant
3. Stopseal Batt
4. PipeBloc PCP
5. Penetration Service

Service(s)	PipeBloc PCP Ref	Classification
PVC Pipe 32mm Ø, 1.8mm wall thickness	32mm	EI 120 U/C
PVC Pipe 40mm Ø, 1.8mm wall thickness	40mm	
PVC Pipe 50mm Ø, 1.8mm wall thickness	50mm	
PVC Pipe 55mm Ø, 1.8-2.3mm wall thickness	55mm	
PVC Pipe 63mm Ø, 2.3-3mm wall thickness	63mm	
PVC Pipe 75mm Ø, 3.1-4.8mm wall thickness	75mm	
PVC Pipe 82mm Ø, 3.1-4.8mm wall thickness	82mm	
PVC Pipe 90mm Ø, 4.2-7.4mm wall thickness	90mm	
PVC Pipe 100mm Ø, 4.2-7.4mm wall thickness	100mm	
PVC Pipe 110mm Ø, 4.2-7.4mm wall thickness	110mm	
PVC Pipe 125mm Ø, 6mm wall thickness	125mm	
PVC Pipe 140mm Ø, 6.1-7.5mm wall thickness	140mm	
PVC Pipe 160mm Ø, 6.2-9.5mm wall thickness	160mm	

Collars secured both faces of the substrate utlising 80mm long pig tail screw through to the Stopseal Fire Batt
[1]Patress installation of Stopseal Coated Batt. The Batts are installed in horizontal rows and fixed in minimum two vertical edges. Overlap of batts to substrate min 100mm. Batts mechanically fixed to substrate with min 6mm x 80mm steel screws and steel retaining washer. Fixings installed at max 300mm centres.

Appendix UL-EU CERTIFICATE

Certificate No. UL-EU-00771-CPR
Page 121/157
Date of Issue 2015-04-19

Max Aperture 730mm Wide x 1200mm High
(Penetrations positioned as per option 1 or 2 below, 0mm distance between services and 50mm to edge of seal)

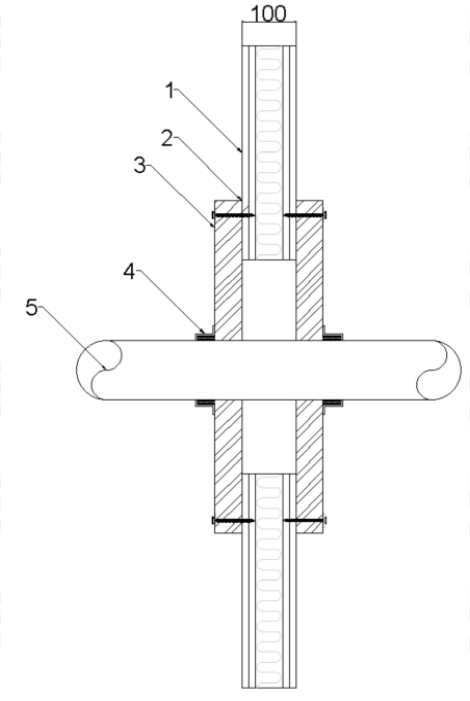

Key
1. Supporting construction
2. Pyrocoustic Sealant
3. Stopseal Batt
4. PipeBloc PCP
5. Penetration Service

Service(s)	PipeBloc PCP Ref	Classification
PP Pipe 32mm Ø, 2.9mm wall thickness	32mm	EI 120 U/C
PP Pipe 40mm Ø, 2.9mm wall thickness	40mm	
PP Pipe 50mm Ø, 2.9mm wall thickness	50mm	
PP Pipe 55mm Ø, 2.9-4.4mm wall thickness	55mm	
PP Pipe 63mm Ø, 2.9-4.4mm wall thickness	63mm	
PP Pipe 75mm Ø, 2.8-6.7mm wall thickness	75mm	
PP Pipe 82mm Ø, 2.8-6.7mm wall thickness	82mm	
PP Pipe 90mm Ø, 2.7-10mm wall thickness	90mm	
PP Pipe 100mm Ø, 2.7-10mm wall thickness	100mm	
PP Pipe 110mm Ø, 2.7-10mm wall thickness	110mm	
PP Pipe 125mm Ø, 3.1mm wall thickness	125mm	
PP Pipe 140mm Ø, 3.5-8mm wall thickness	140mm	
PP Pipe 160mm Ø, 4-14.6mm wall thickness	160mm	

Collars secured both faces of the substrate utlising 80mm long pig tail screw through to the Stopseal Fire Batt
[1]Patress installation of Stopseal Coated Batt. The Batts are installed in horizontal rows and fixed in minimum two vertical edges. Overlap of batts to substrate min 100mm. Batts mechanically fixed to substrate with min 6mm x 80mm steel screws and steel retaining washer. Fixings installed at max 300mm centres.

Appendix UL-EU CERTIFICATE

Max Aperture 2600mm Wide x 2600mm High
(Penetrations positioned as per option 1 or 2 below, 0mm distance between services and 50mm to edge of seal)

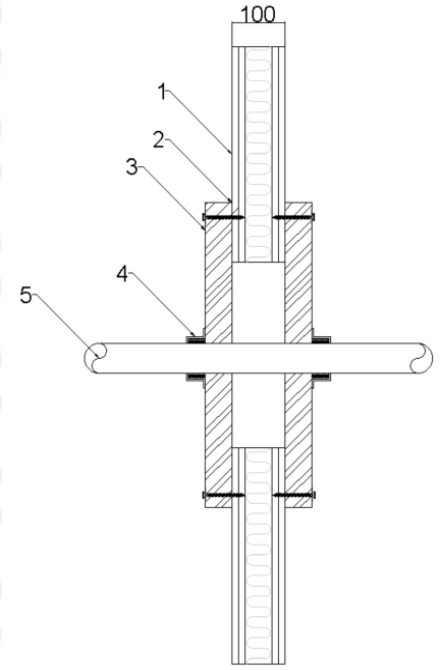

Key
1. Supporting construction
2. Pyrocoustic Sealant
3. Stopseal Batt
4. PipeBloc PCP
5. Penetration Service

Service(s)	PipeBloc PCP Ref	Classification
PP Pipe 32mm Ø, 2.9mm wall thickness	32mm	EI 60 U/C
PP Pipe 40mm Ø, 2.9mm wall thickness	40mm	
PP Pipe 50mm Ø, 2.9mm wall thickness	50mm	
PP Pipe 55mm Ø, 2.9-4.4mm wall thickness	55mm	
PP Pipe 63mm Ø, 2.9-4.4mm wall thickness	63mm	
PP Pipe 75mm Ø, 2.8-6.7mm wall thickness	75mm	
PP Pipe 82mm Ø, 2.8-6.7mm wall thickness	82mm	
PP Pipe 90mm Ø, 2.7-10mm wall thickness	90mm	
PP Pipe 100mm Ø, 2.7-10mm wall thickness	100mm	
PP Pipe 110mm Ø, 2.7-10mm wall thickness	110mm	
PP Pipe 125mm Ø, 3.1mm wall thickness	125mm	
PP Pipe 140mm Ø, 3.5-8mm wall thickness	140mm	
PP Pipe 160mm Ø, 4-14.6mm wall thickness	160mm	

Collars secured both faces of the substrate utlising 80mm long pig tail screw through to the Stopseal Fire Batt
[1]Patress installation of Stopseal Coated Batt. The Batts are installed in horizontal rows and fixed in minimum two vertical edges. Overlap of batts to substrate min 100mm. Batts mechanically fixed to substrate with min 6mm x 80mm steel screws and steel retaining washer. Fixings installed at max 300mm centres.

Appendix UL-EU CERTIFICATE

Certificate No. UL-EU-00771-CPR
Page 123/157
Date of Issue 2015-04-19

Max Aperture 730mm Wide x 1200mm High
(Penetrations positioned as per option 1 or 2 below, 0mm distance between services and 50mm to edge of seal)

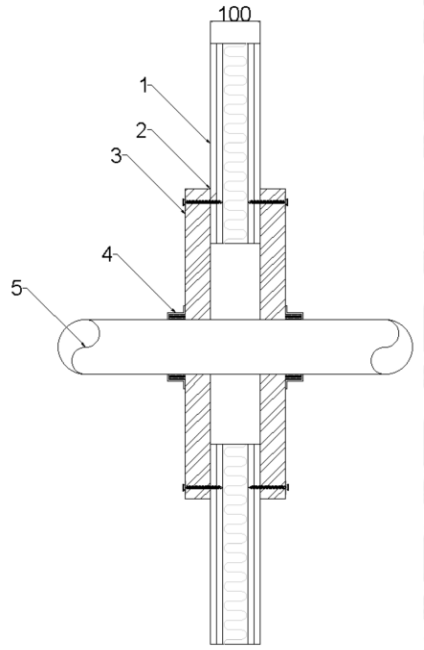

Key
1. Supporting construction
2. Pyrocoustic Sealant
3. Stopseal Batt
4. PipeBloc PCP
5. Penetration Service

Service(s)	PipeBloc PCP Ref	Classification
PE Pipe 32mm Ø, 2.9mm wall thickness	32mm	EI 120 U/C
PE Pipe 40mm Ø, 2.9mm wall thickness	40mm	
PE Pipe 50mm Ø, 2.9mm wall thickness	50mm	
PE Pipe 55mm Ø, 2.9-4.4mm wall thickness	55mm	
PE Pipe 63mm Ø, 2.9-4.4mm wall thickness	63mm	
PE Pipe 75mm Ø, 2.8-6.7mm wall thickness	75mm	
PE Pipe 82mm Ø, 2.8-6.7mm wall thickness	82mm	
PE Pipe 90mm Ø, 2.7-10mm wall thickness	90mm	
PE Pipe 100mm Ø, 2.7-10mm wall thickness	100mm	
PE Pipe 110mm Ø, 2.7-10mm wall thickness	110mm	
PE Pipe 125mm Ø, 3.1mm wall thickness	125mm	
PE Pipe 140mm Ø, 3.9-5.8mm wall thickness	140mm	
PE Pipe 160mm Ø, 4.9-9.5mm wall thickness	160mm	

Collars secured both faces of the substrate utlising 80mm long pig tail screw through to the Stopseal Fire Batt
[1]Patress installation of Stopseal Coated Batt. The Batts are installed in horizontal rows and fixed in minimum two vertical edges. Overlap of batts to substrate min 100mm. Batts mechanically fixed to substrate with min 6mm x 80mm steel screws and steel retaining washer. Fixings installed at max 300mm centres.

Appendix UL-EU CERTIFICATE

Certificate No. UL-EU-00771-CPR
Page 124/157
Date of Issue 2015-04-19

Max Aperture 2600mm Wide x 2600mm High
(Penetrations positioned as per option 1 or 2 below, 0mm distance between services and 50mm to edge of seal)

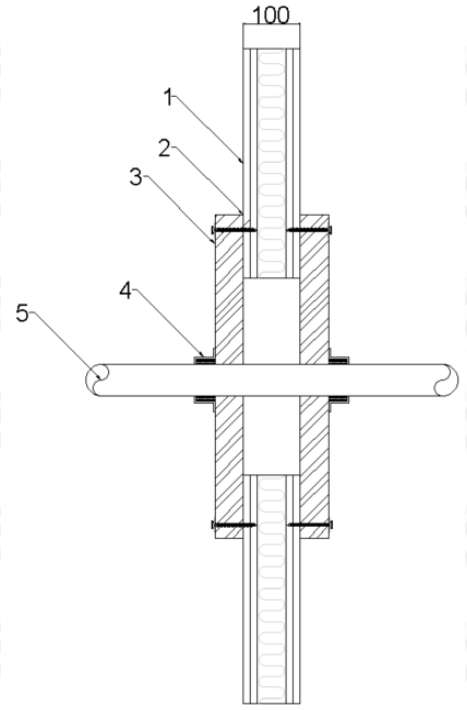

Key
1. Supporting construction
2. Pyrocoustic Sealant
3. Stopseal Batt
4. PipeBloc PCP
5. Penetration Service

Service(s)	PipeBloc PCP Ref	Classification
PE Pipe 32mm Ø, 2.9mm wall thickness	32mm	EI 60 U/C
PE Pipe 40mm Ø, 2.9mm wall thickness	40mm	
PE Pipe 50mm Ø, 2.9mm wall thickness	50mm	
PE Pipe 55mm Ø, 2.9-4.4mm wall thickness	55mm	
PE Pipe 63mm Ø, 2.9-4.4mm wall thickness	63mm	
PE Pipe 75mm Ø, 2.8-6.7mm wall thickness	75mm	
PE Pipe 82mm Ø, 2.8-6.7mm wall thickness	82mm	
PE Pipe 90mm Ø, 2.7-10mm wall thickness	90mm	
PE Pipe 100mm Ø, 2.7-10mm wall thickness	100mm	
PE Pipe 110mm Ø, 2.7-10mm wall thickness	110mm	
PE Pipe 125mm Ø, 3.1mm wall thickness	125mm	
PE Pipe 140mm Ø, 3.9-5.8mm wall thickness	140mm	
PE Pipe 160mm Ø, 4.9-9.5mm wall thickness	160mm	

Collars secured both faces of the substrate utlising 80mm long pig tail screw through to the Stopseal Fire Batt
[1]Patress installation of Stopseal Coated Batt. The Batts are installed in horizontal rows and fixed in minimum two vertical edges. Overlap of batts to substrate min 100mm. Batts mechanically fixed to substrate with min 6mm x 80mm steel screws and steel retaining washer. Fixings installed at max 300mm centres.

Appendix UL-EU CERTIFICATE

Max Aperture 2600mm Wide x 2600mm High
(Penetrations positioned as per option 1 or 2 below, 0mm distance between services and 50mm to edge of seal)

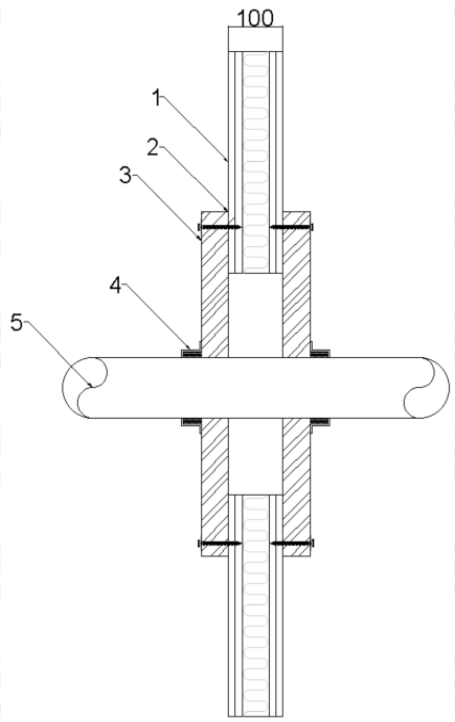

Key
1. Supporting construction
2. Pyrocoustic Sealant
3. Stopseal Batt
4. PipeBloc PCP
5. Penetration Service

Scope and Classifications as below

Intumescent Thickness	
Pipe Diameter	**Intumescent Material**
ø 32 mm - ø 50 mm	40 mm (W) x 2 mm (T)
ø 51 mm - ø 82 mm	40 mm (W) x 4 mm (T)
ø 83 mm - ø 115 mm	40 mm (W) x 6 mm (T)
ø 116 mm - ø 160 mm	40 mm (W) x 8 mm (T)
ø 161 mm - ø 200 mm	40 mm (W) x 10 mm (T)
ø 201 mm - ø 250 mm	40 mm (W) x 12 mm (T)

Wrap secured internally within both faces of the Stopseal Fire Batt
[1]Patress installation of Stopseal Coated Batt. The Batts are installed in horizontal rows and fixed in minimum two vertical edges. Overlap of batts to substrate min 100mm. Batts mechanically fixed to substrate with min 6mm x 80mm steel screws and steel retaining washer. Fixings installed at max 300mm centres.

Appendix UL-EU CERTIFICATE

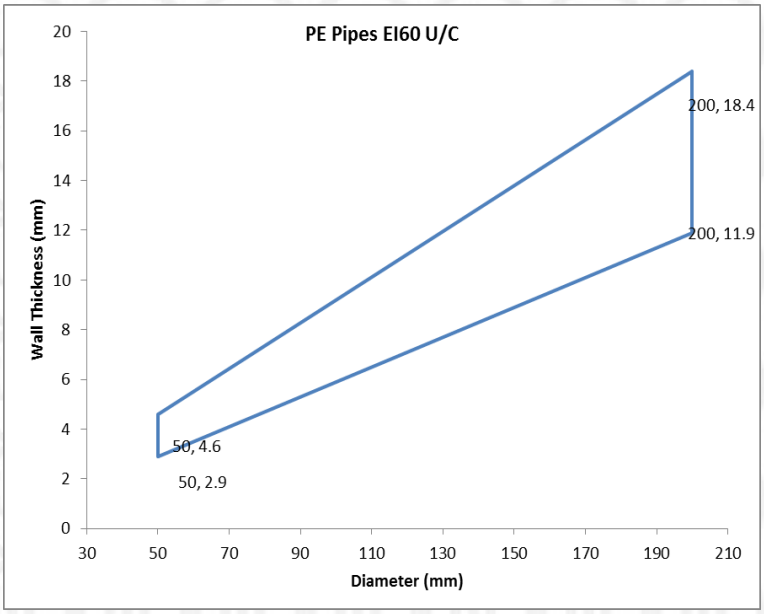

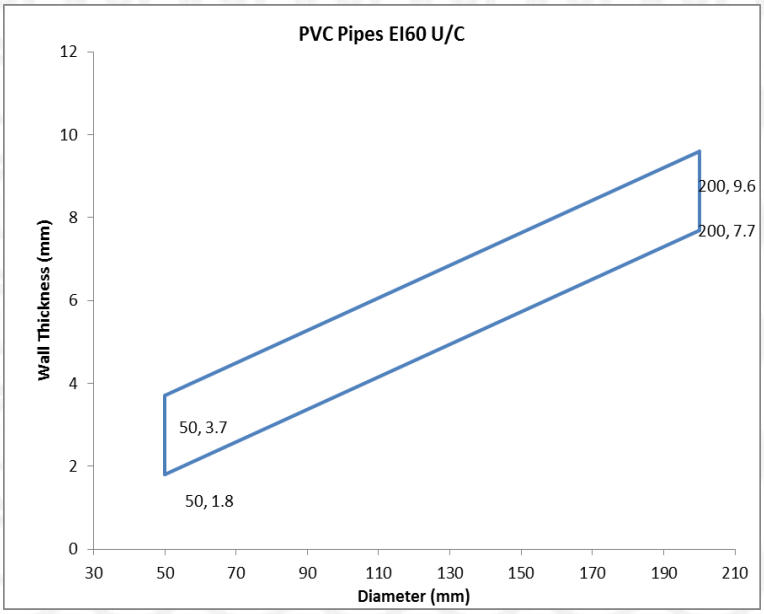

Appendix UL-EU CERTIFICATE

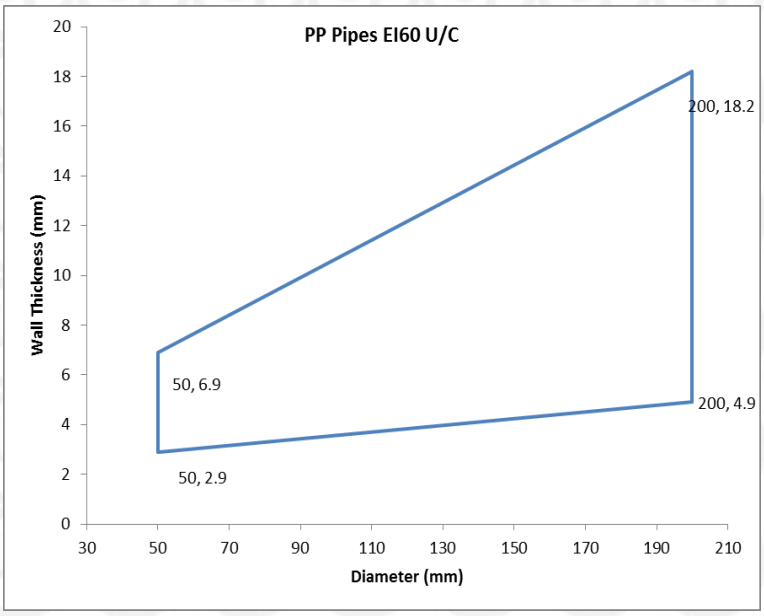

Appendix UL-EU CERTIFICATE

Max Aperture 2600mm Wide x 2600mm High	
30mm overlap patress installed flush to soffit 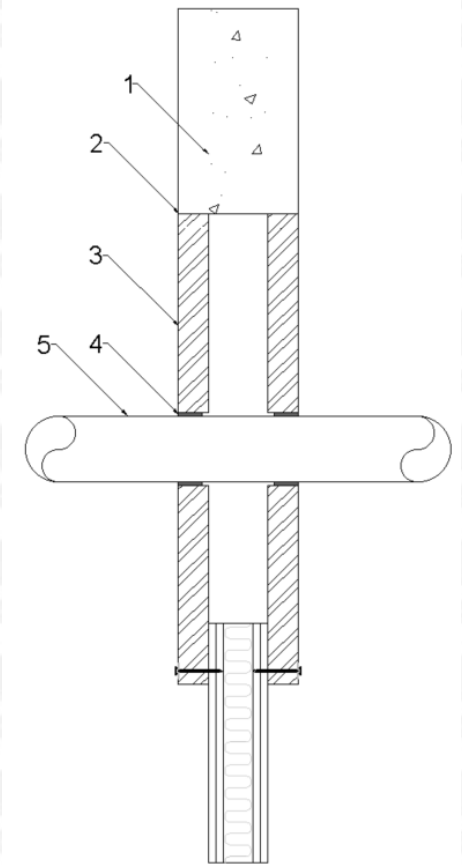 	Key 1. Supporting construction 2. Pyrocoustic Sealant 3. Stopseal Batt 4. PipeBloc EL / PipeBloc PWP 5. Penetration Service
Service(s)	**Classification**
PVC Pipe 110mm Ø, 4.2mm wall thickness	EI 60 C/U

[1]Patress installation of Stopseal Coated Batt. The Batts are installed in horizontal rows and fixed in minimum two vertical edges. Overlap of batts to substrate min 30mm. Batts mechanically fixed to substrate with min 6mm x 80mm steel screws and steel retaining washer. Fixings installed at max 300mm centres. No fixing is applied to the head flush to the soffit
[2]4 x 2mm thick layers of PipeBloc EL / PipeBloc PWP installed both sides of the substrate within the patress installation

Appendix UL-EU CERTIFICATE

Certificate No. UL-EU-00771-CPR
Page 129/157
Date of Issue 2015-04-19

Max Aperture 2600mm Wide x 2600mm High	
30mm overlap patress installed flush to soffit 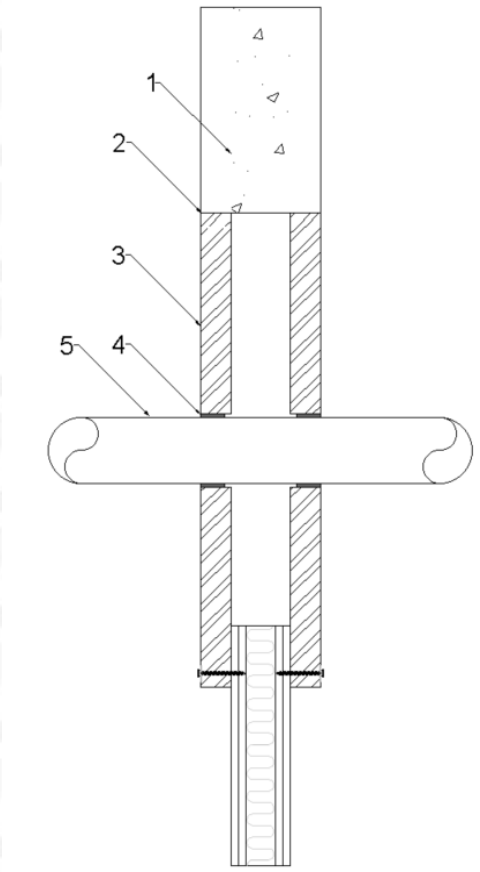 	Key 1. Supporting construction 2. Pyrocoustic Sealant 3. Stopseal Batt 4. PipeBloc EL / PipeBloc PWP 5. Penetration Service
Service(s)	**Classification**
PVC Pipe 110mm Ø, 4.2mm wall thickness	EI 60 C/U

[1]Patress installation of Stopseal Coated Batt. The Batts are installed in horizontal rows and fixed in minimum two vertical edges. Overlap of batts to substrate min 30mm. Batts mechanically fixed to substrate with min 6mm x 80mm steel screws and steel retaining washer. Fixings installed at max 300mm centres. No fixing is applied to the head flush to the soffit
[2]4 x 2mm thick layers of PipeBloc EL / PipeBloc PWP installed both sides of the substrate within the patress installation

Appendix UL-EU CERTIFICATE

Rigid Floors Minimum Thickness 150mm

Double Layer, Stopseal Fire Batt 50mm, Electrical Cables

Max Aperture 1100mm Wide x 1500mm Long

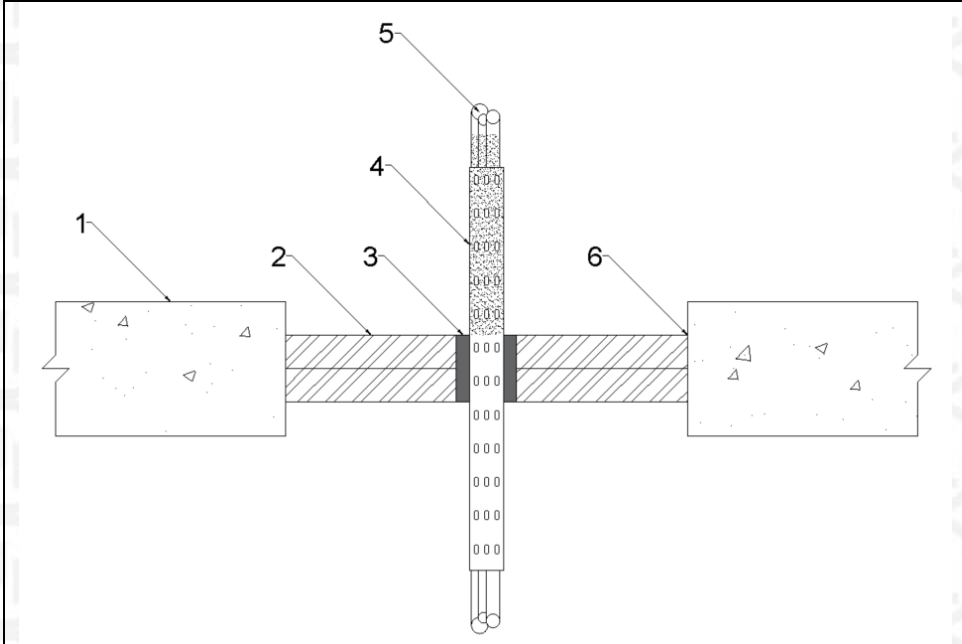

Key
1. Supporting construction
2. Stopseal Batt
3. Pyropro HPE
4. PST Coating
5. Penetration Service
6. Pyrocoustic Sealant

Penetration Specification	Classification
*500mm perforated cable tray	EI 60
*Electrical cables up to 21mm ø	
*1 off 'C1' Cable	
*1 off 'C2' Cable	
*1 off 'C3' Cable	

*All cables coated with 2mm DFT PST Coating 300mm along the cables upper side of the seal
Pyropro HPE 20mm annulus full 50mm depth of the Stopseal Coated Batt

Appendix UL-EU CERTIFICATE

Max Aperture 1100mm Wide x 1500mm Long

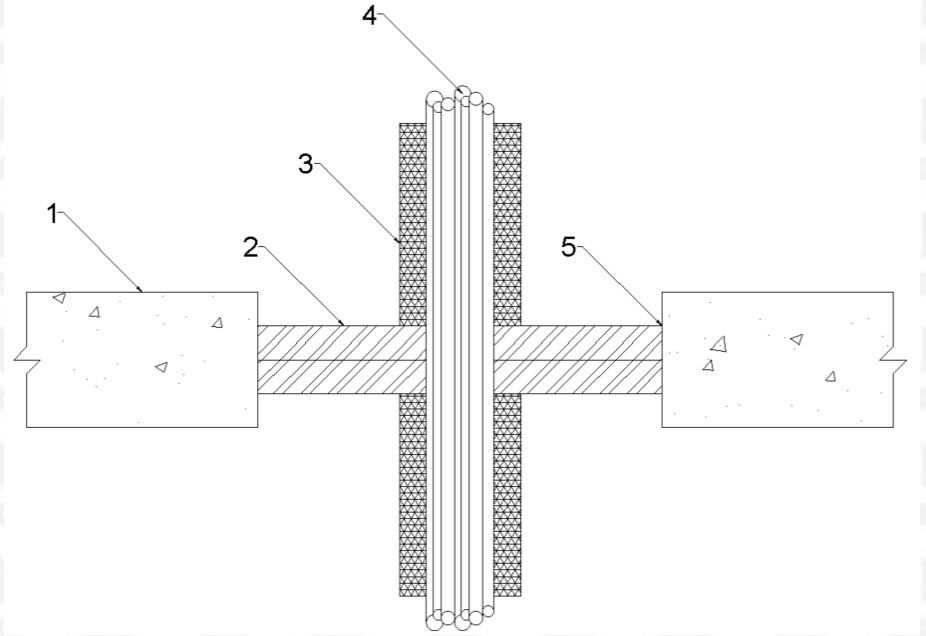

Key
1. Supporting construction
2. Stopseal Batt
3. Insulation
4. Penetration Service
5. Pyrocoustic Sealant

Service(s)	Classification
[1]Electrical cables upto 80mm dia	EI 60
[1]Cable Trays and Ladders	
[1]100 mm diameter bundle telecommunication cable type “F”	
[1]Unsheathed electrical cables up to 17mm dia	
[1]Unsheathed electrical cables 18-24mm dia	
[1]Steel or Copper Conduits up to 16mm	
[1]Plastic conduits up to 16mm	

[1]Cables and cable trays wrapped with a single layer of 40mm thick stonewool, min 40kg/m^3 (L/I 300mm)

Appendix UL-EU CERTIFICATE

Max Aperture 700mm Wide x 1100mm Long	
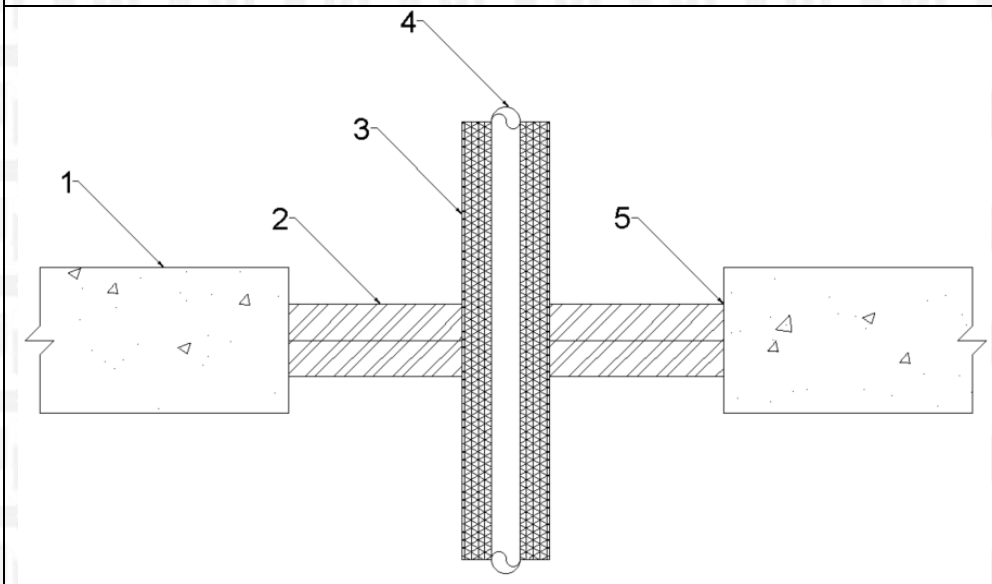	Key 1. Supporting construction 2. Stopseal Batt 3. Insulation 4. Penetration Service 5. Pyrocoustic Sealant
Service(s)	**Classification**
Steel or Copper Pipe 42mm Ø, 1.2mm – 14.2mm wall thickness. (L/I 300mm) 40mm stone wool insulation (min 40Kg/m^3)	EI 120 C/U
Steel or Copper Pipe 42mm – 159mm Ø, 2mm – 14.2mm wall thickness. (L/I 300mm) 40mm stone wool insulation (min 40Kg/m^3)	E 120 C/U EI 30 C/U

Appendix UL-EU CERTIFICATE

Double Layer, Stopseal Fire Batt 50mm, Insulated Metallic Pipes

Max Aperture 1100mm Wide x 1500mm Long	
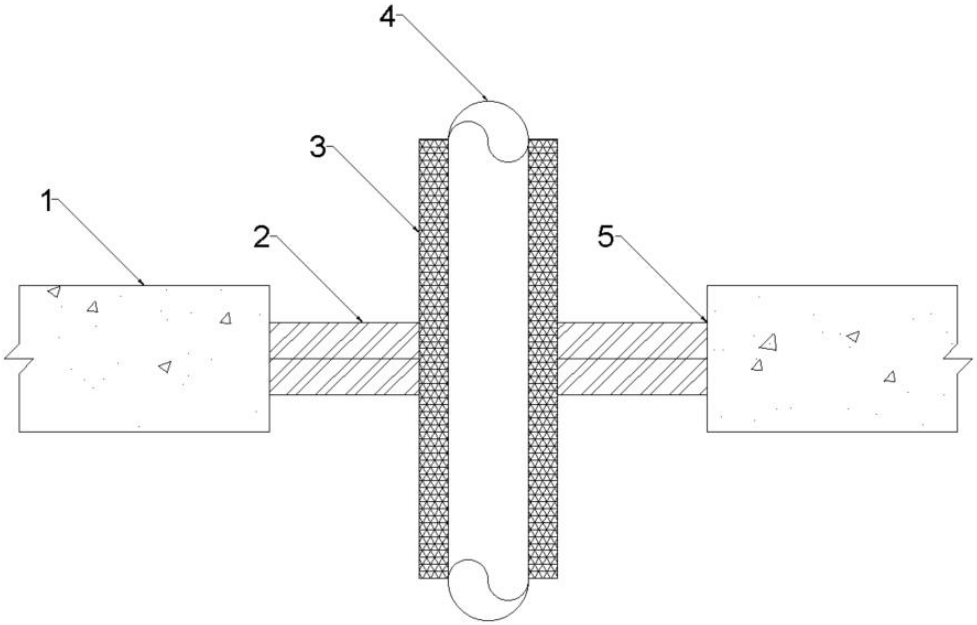	Key 1. Supporting construction 2. Stopseal Batt 3. Insulation 4. Penetration Service 5. Pyrocoustic Sealant
Service(s)	**Classification**
Steel or Copper Pipe 42mm Ø, 1.2mm – 14.2mm wall thickness. (L/I 300mm) 40mm stone wool insulation (min 40Kg/m^3)	E 90 C/U EI 60 C/U
Steel or Copper Pipe 42mm – 159mm Ø, 2mm – 14.2mm wall thickness. (L/I 300mm) 40mm stone wool insulation (min 40Kg/m^3)	E 90 C/U EI 30 C/U

Appendix UL-EU CERTIFICATE

Double Layer, Stopseal Fire Batt 50mm, Plastic Pipes

Max Aperture 750mm Wide x 1100mm Long		
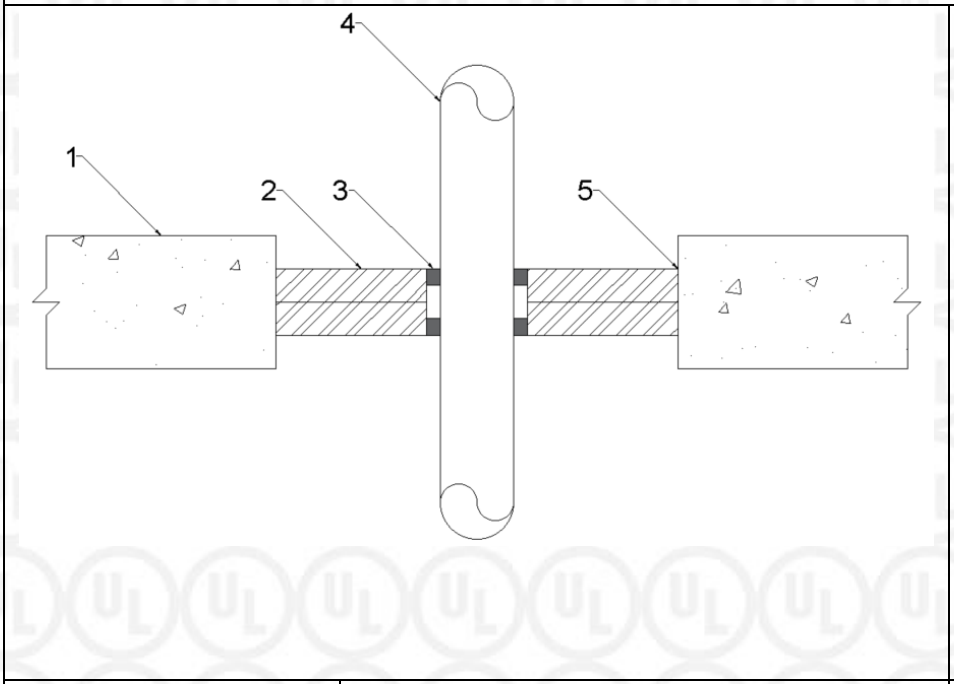		Key 1. Supporting construction 2. Stopseal Batt 3. Pyropro HPE 4. Penetration Service 5. Pyrocoustic Sealant
Penetration Specification	**Pyropro HPE**	**Classification**
Pipe Diameters as below	20mm annulus, 25mm deep both faces of the Stopseal Coated Batt	**See graphs below**

Appendix UL-EU CERTIFICATE

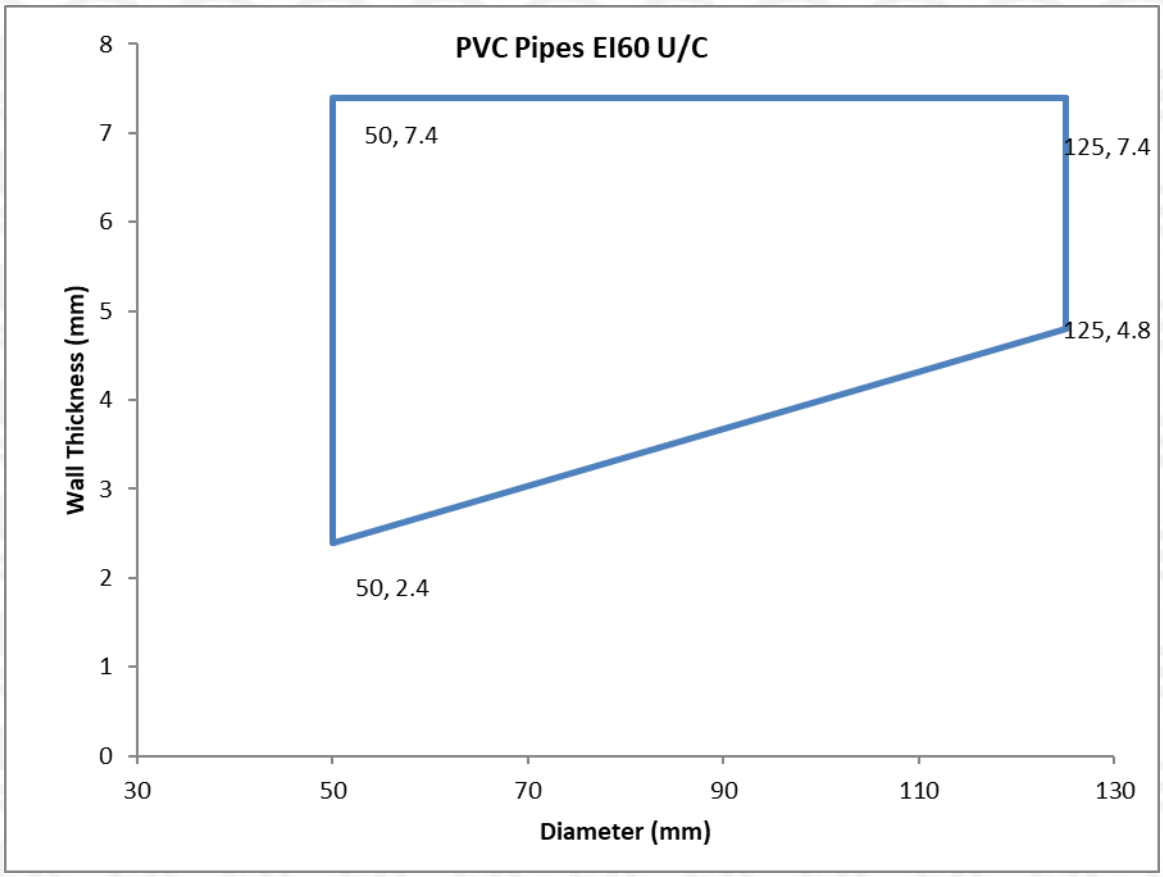

Appendix UL-EU CERTIFICATE

Max Aperture 750mm Wide x 1100mm Long

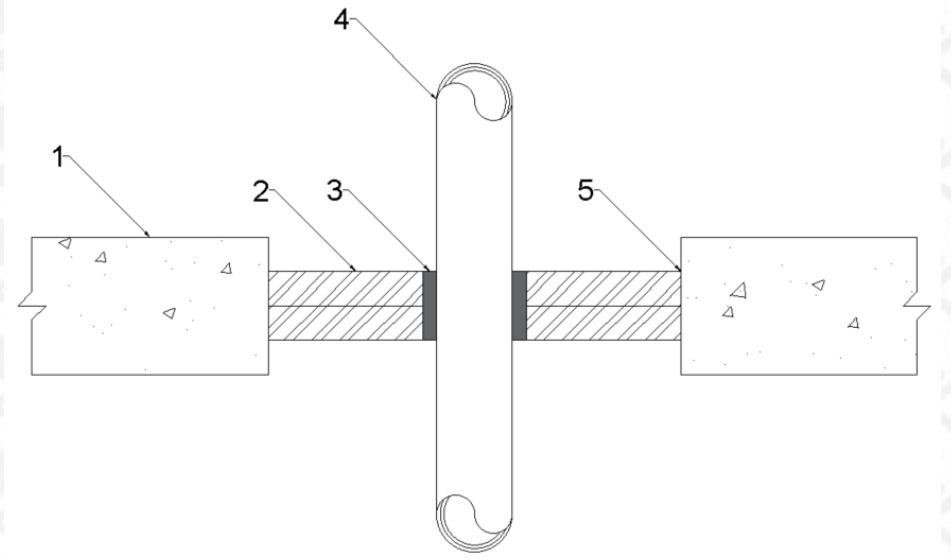

Key
1. Supporting construction
2. Stopseal Batt
3. Pyropro HPE
4. Penetration Service
5. Pyrocoustic Sealant

Penetration Specification	Classification
Uponor MLC (Multi-Layer Composite) Pipe 40mm ø 4mm wall thickness	EI 60 U/C
Uponor MLC (Multi-Layer Composite) Pipe 50mm ø 4.5mm wall thickness	
Uponor MLC (Multi-Layer Composite) Pipe 63mm ø 6mm wall thickness	
Uponor MLC (Multi-Layer Composite) Pipe 75mm ø 7.5mm wall thickness	
Uponor MLC (Multi-Layer Composite) Pipe 90mm ø 8.5mm wall thickness	
Uponor MLC (Multi-Layer Composite) Pipe 110mm ø 10mm wall thickness	

Pyropro HPE 20mm annulus full 50mm depth of the Stopseal Coated Batt

Appendix UL-EU CERTIFICATE

Max Aperture 1100mm Wide x 1500mm Long

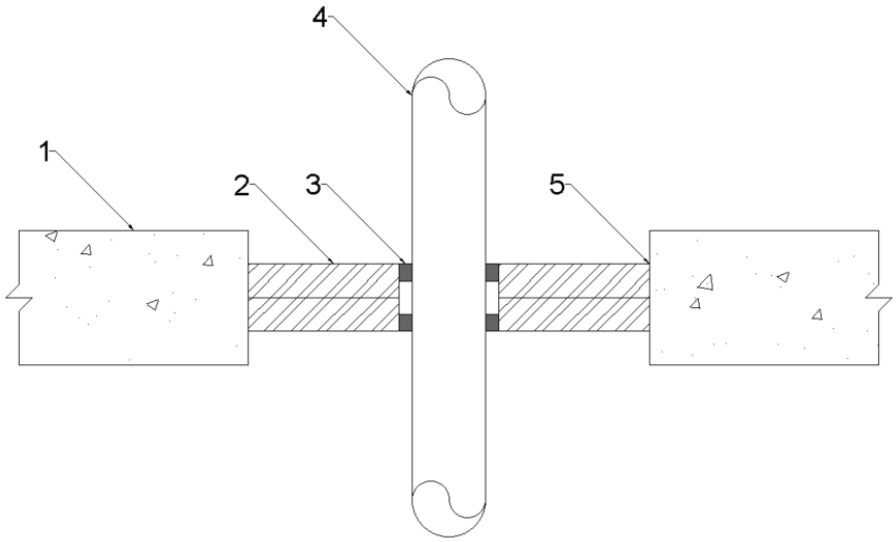

Key
1. Supporting construction
2. Stopseal Batt
3. Pyropro HPE
4. Penetration Service
5. Pyrocoustic Sealant

Penetration Specification	Pyropro HPE	Classification
Pipe Diameters as below	20mm annulus, 25mm deep both faces of the Stopseal Coated Batt	**See graphs below**

Appendix UL-EU CERTIFICATE

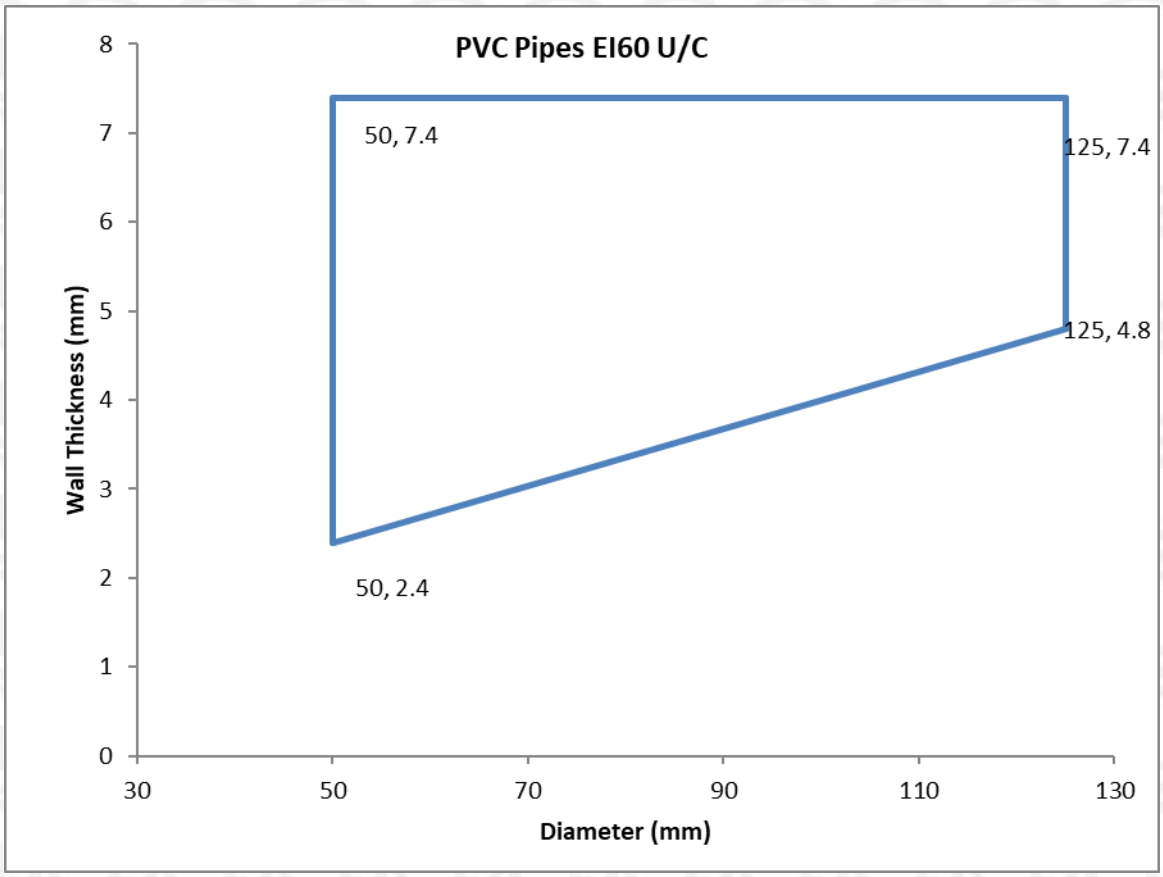

Appendix UL-EU CERTIFICATE

Max Aperture 1100mm Wide x 1500mm Long

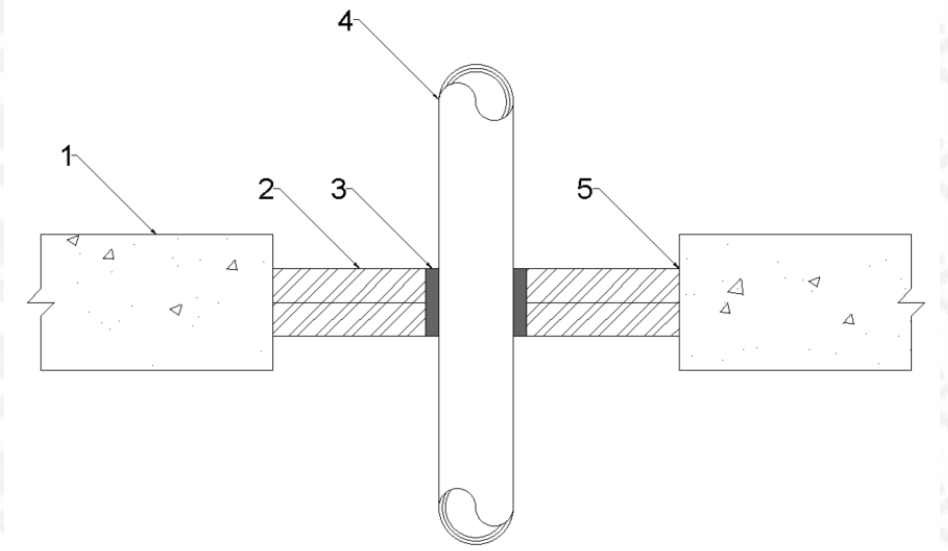

Key
1. Supporting construction
2. Stopseal Batt
3. Pyropro HPE
4. Penetration Service
5. Pyrocoustic Sealant

Penetration Specification	Classification
Uponor MLC (Multi-Layer Composite) Pipe 40mm ø 4mm wall thickness	EI 60 U/C
Uponor MLC (Multi-Layer Composite) Pipe 50mm ø 4.5mm wall thickness	
Uponor MLC (Multi-Layer Composite) Pipe 63mm ø 6mm wall thickness	
Uponor MLC (Multi-Layer Composite) Pipe 75mm ø 7.5mm wall thickness	
Uponor MLC (Multi-Layer Composite) Pipe 90mm ø 8.5mm wall thickness	
Uponor MLC (Multi-Layer Composite) Pipe 110mm ø 10mm wall thickness	

Pyropro HPE 20mm annulus full 50mm depth of the Stopseal Coated Batt

Appendix UL-EU CERTIFICATE

Certificate No. UL-EU-00771-CPR
Page 140/157
Date of Issue 2015-04-19

Max Aperture 350mm Wide x 1000mm Long

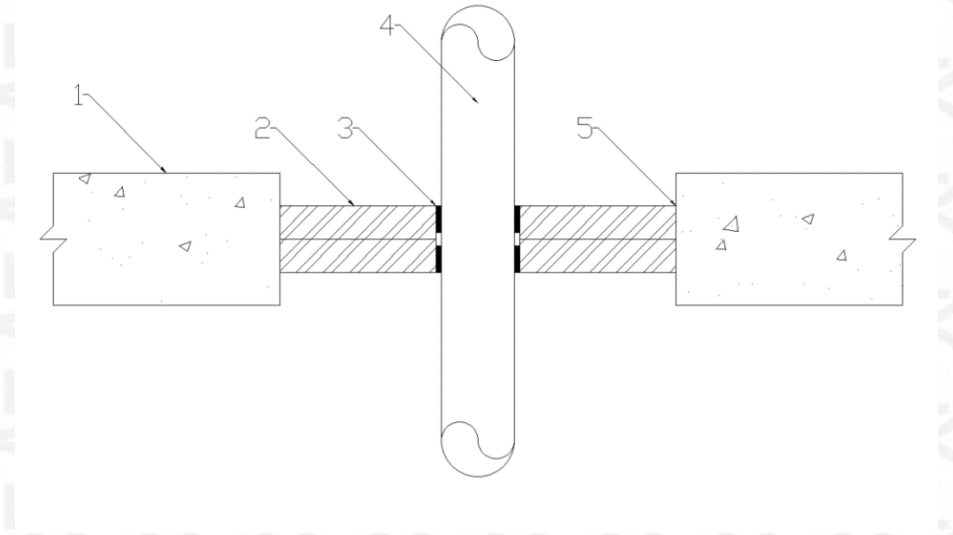

Key
1. Supporting construction
2. Stopseal Batt
3. PipeBloc EL / PipeBloc PWP
4. Penetration Service
5. Pyrocoustic Sealant

Service(s)	PipeBloc EL / PipeBloc PWP Ref	Classification
PVC Pipe up to 125mm Ø, 4.8-7.4mm wall thickness.	2mm thickness	EI 120 U/C
PP Pipe up to 40mm Ø, 3.1-17.1mm wall thickness.	2mm thickness	
PE Pipe up to 125mm Ø, 11.4mm wall thickness.	2mm thickness	
PE Pipe up to 125mm Ø, 3.1-11.4mm wall thickness.	2mm thickness	E 120 U/C EI 90 U/C

[1]PipeBloc EL / PipeBloc PWP secured internally within both faces of the Stopseal Fire Batt

Appendix UL-EU CERTIFICATE

Max Aperture 1100mm Wide x 1500mm Long

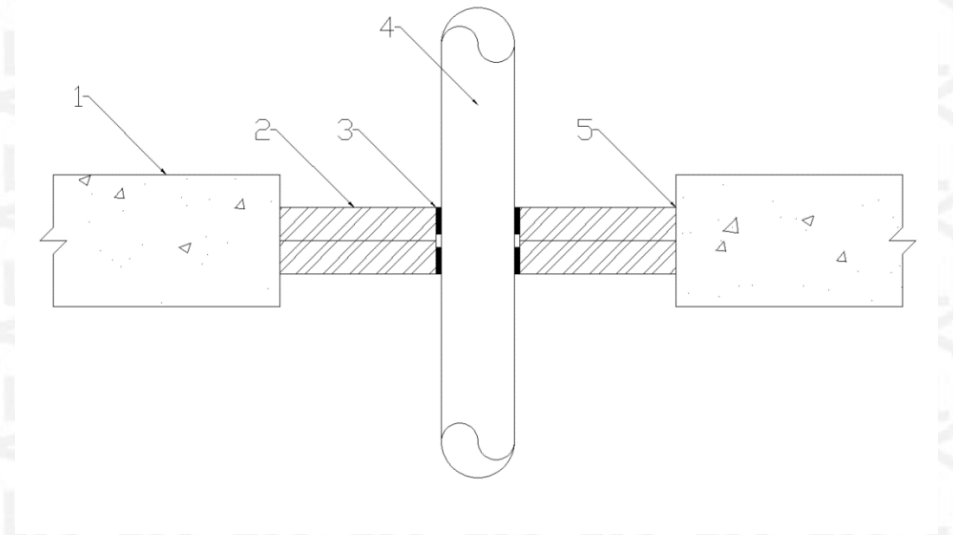

Key
1. Supporting construction
2. Stopseal Batt
3. PipeBloc EL / PipeBloc PWP
4. Penetration Service
5. Pyrocoustic Sealant

Service(s)	PipeBloc EL / PipeBloc PWP Ref	Classification
PVC Pipe up to 125mm Ø, 4.8-7.4mm wall thickness.	2mm thickness	EI 60 U/C
PP Pipe up to 40mm Ø, 3.1-17.1mm wall thickness.	2mm thickness	
PE Pipe up to 125mm Ø, 11.4mm wall thickness.	2mm thickness	
PE Pipe up to 125mm Ø, 3.1-11.4mm wall thickness.	2mm thickness	

[1]PipeBloc EL / PipeBloc PWP secured internally within both faces of the Stopseal Fire Batt

Appendix UL-EU CERTIFICATE

Max Aperture 350mm Wide x 1000mm Long

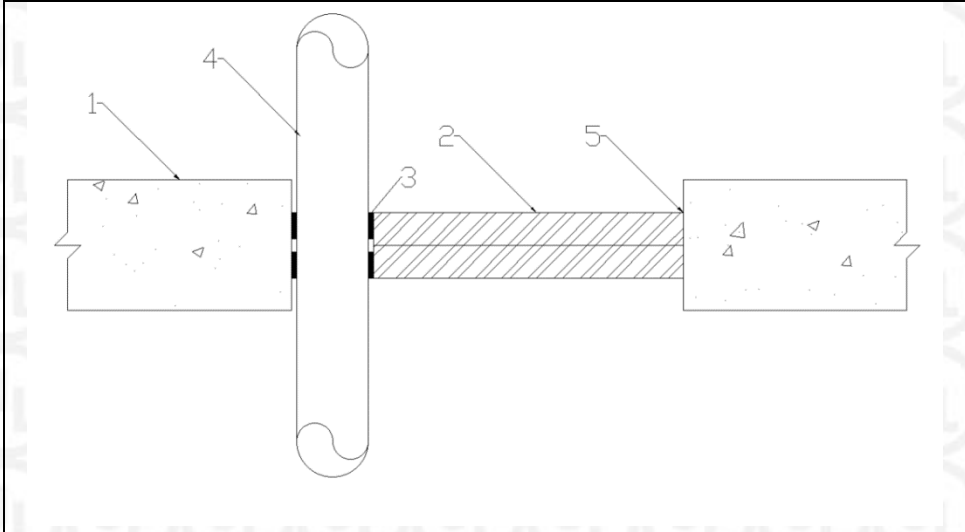

Key
1. Supporting construction
2. Stopseal Batt
3. PipeBloc EL / PipeBloc PWP
4. Penetration Service
5. Pyrocoustic Sealant

Service(s)	PipeBloc EL / PipeBloc PWP Ref	Classification
PVC Pipe up to 125mm Ø, 4.8-7.4mm wall thickness.	2mm thickness	EI 120 U/C
PP Pipe up to 40mm Ø, 3.1-17.1mm wall thickness.	2mm thickness	
PE Pipe up to 125mm Ø, 11.4mm wall thickness.	2mm thickness	
PE Pipe up to 125mm Ø, 3.1-11.4mm wall thickness.	2mm thickness	E 120 U/C EI 90 U/C

[1]PipeBloc EL / PipeBloc PWP secured internally within both faces of the Stopseal Fire Batt

Appendix UL-EU CERTIFICATE

Max Aperture 1100mm Wide x 1500mm Long

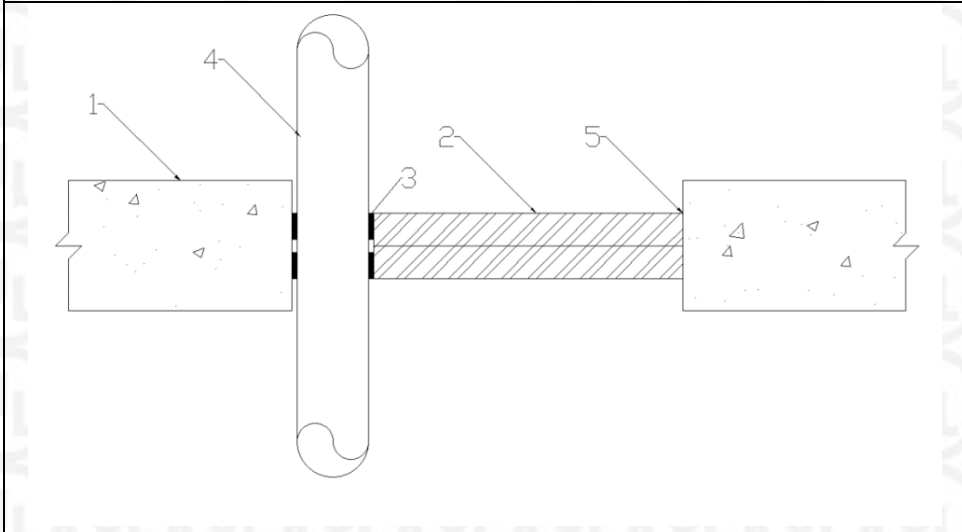

Key
1. Supporting construction
2. Stopseal Batt
3. PipeBloc EL / PipeBloc PWP
4. Penetration Service
5. Pyrocoustic Sealant

Service(s)	PipeBloc EL / PipeBloc PWP Ref	Classification
PVC Pipe up to 125mm Ø, 4.8-7.4mm wall thickness.	2mm thickness	EI 60 U/C
PP Pipe up to 40mm Ø, 3.1-17.1mm wall thickness.	2mm thickness	
PE Pipe up to 125mm Ø, 11.4mm wall thickness.	2mm thickness	
PE Pipe up to 125mm Ø, 3.1-11.4mm wall thickness.	2mm thickness	

[1]PipeBloc EL / PipeBloc PWP secured internally within both faces of the Stopseal Fire Batt

Appendix UL-EU CERTIFICATE

Max Aperture 350mm Wide x 1000mm Long

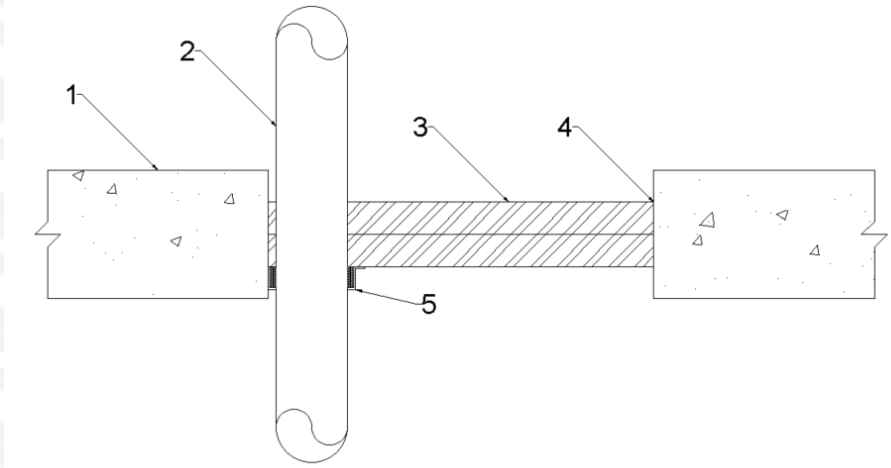

Key
1. Supporting construction
2. Penetration Service
3. Stopseal Batt
4. Pyrocoustic Sealant
5. PipeBloc PCP

Penetration Specification	Pipe Bloc PCP Collars	Classification
Pipe Diameters as below. Zero Distance	Fixed to the underside of the Stopseal Coated Batt utilising steel pig tail fixings	EI 120 U/C

Penetration Specification	Collar Reference	Intumescent Material
PVC Pipe 32mm Ø 1.8mm wall thickness	32mm PipeBloc PCP	30mm (W) x 4mm (T)
PVC Pipe 40mm Ø 1.8mm wall thickness	40mm PipeBloc PCP	
PVC Pipe 50mm Ø 1.8mm wall thickness	50mm PipeBloc PCP	
PVC Pipe 55mm Ø 2.3-2.8mm wall thickness	55mm PipeBloc PCP	30mm (W) x 6mm (T)
PVC Pipe 63mm Ø 2.3-2.8mm wall thickness	63mm PipeBloc PCP	
PVC Pipe 75mm Ø 3.1-4.4mm wall thickness	75mm PipeBloc PCP	30mm (W) x 8mm (T)
PVC Pipe 82mm Ø 3.1-4.4mm wall thickness	82mm PipeBloc PCP	
PVC Pipe 90mm Ø 4.2-6.6mm wall thickness	90mm PipeBloc PCP	30mm (W) x 10mm (T)
PVC Pipe 100mm Ø 4.2-6.6mm wall thickness	100mm PipeBloc PCP	
PVC Pipe 110mm Ø 4.2-6.6mm wall thickness	110mm PipeBloc PCP	
PVC Pipe 125mm Ø 6.0mm wall thickness	125mm PipeBloc PCP	40mm (W) x 12mm (T)
PVC Pipe 140mm Ø 6.1-7.5mm wall thickness	140mm PipeBloc PCP	
PVC Pipe 160mm Ø 6.2-9.5mm wall thickness	160mm PipeBloc PCP	

Appendix UL-EU CERTIFICATE

Penetration Specification	Collar Reference	Intumescent Material
PP Pipe 32mm Ø 2.9mm wall thickness	32mm PipeBloc PCP	30mm (W) x 4mm (T)
PP Pipe 40mm Ø 2.9mm wall thickness	40mm PipeBloc PCP	
PP Pipe 50mm Ø 2.9mm wall thickness	50mm PipeBloc PCP	
PP Pipe 55mm Ø 2.9-4.4mm wall thickness	55mm PipeBloc PCP	30mm (W) x 6mm (T)
PP Pipe 63mm Ø 2.9-4.4mm wall thickness	63mm PipeBloc PCP	
PP Pipe 75mm Ø 2.8-6.7mm wall thickness	75mm PipeBloc PCP	30mm (W) x 8mm (T)
PP Pipe 82mm Ø 2.8-6.7mm wall thickness	82mm PipeBloc PCP	
PP Pipe 90mm Ø 2.7-10.0mm wall thickness	90mm PipeBloc PCP	30mm (W) x 10mm (T)
PP Pipe 100mm Ø 2.7-10.0mm wall thickness	100mm PipeBloc PCP	
PP Pipe 110mm Ø 2.7-10.0mm wall thickness	110mm PipeBloc PCP	
PP Pipe 125mm Ø 3.1mm wall thickness	125mm PipeBloc PCP	40mm (W) x 12mm (T)
PP Pipe 140mm Ø 3.5-8.0mm wall thickness	140mm PipeBloc PCP	
PP Pipe 160mm Ø 4.0-14.6mm wall thickness	160mm PipeBloc PCP	

Penetration Specification	Collar Reference	Intumescent Material
PE Pipe 32mm Ø 2.9mm wall thickness	32mm PipeBloc PCP	30mm (W) x 4mm (T)
PE Pipe 40mm Ø 2.9mm wall thickness	40mm PipeBloc PCP	
PE Pipe 50mm Ø 2.9mm wall thickness	50mm PipeBloc PCP	
PE Pipe 55mm Ø 2.9-4.4mm wall thickness	55mm PipeBloc PCP	30mm (W) x 6mm (T)
PE Pipe 63mm Ø 2.9-4.4mm wall thickness	63mm PipeBloc PCP	
PE Pipe 75mm Ø 2.8-6.7mm wall thickness	75mm PipeBloc PCP	30mm (W) x 8mm (T)
PE Pipe 82mm Ø 2.8-6.7mm wall thickness	82mm PipeBloc PCP	
PE Pipe 90mm Ø 2.7-10.0mm wall thickness	90mm PipeBloc PCP	30mm (W) x 10mm (T)
PE Pipe 100mm Ø 2.7-10.0mm wall thickness	100mm PipeBloc PCP	
PE Pipe 110mm Ø 2.7-10.0mm wall thickness	110mm PipeBloc PCP	
PE Pipe 125mm Ø 3.1mm wall thickness	125mm PipeBloc PCP	40mm (W) x 12mm (T)
PE Pipe 140mm Ø 3.9-5.8mm wall thickness	140mm PipeBloc PCP	
PE Pipe 160mm Ø 4.9-9.5mm wall thickness	160mm PipeBloc PCP	

Appendix UL-EU CERTIFICATE

Double Layer, Stopseal Fire Batt 50mm, Patress Installed Electrical Cables

Max Aperture 1000mm Wide x 1300mm Long	
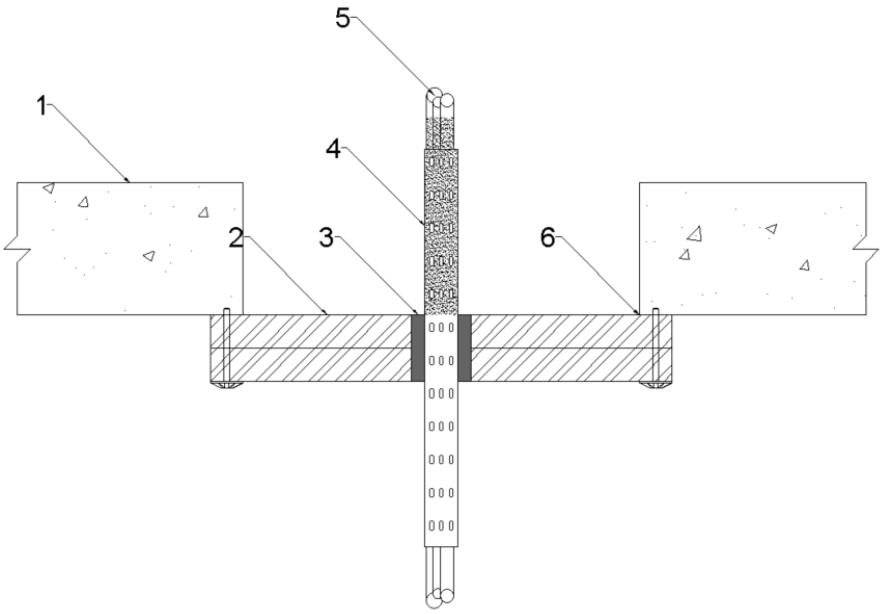	Key 1. Supporting construction 2. Stopseal Batt 3. Pyropro HPE 4. PST Coating 5. Penetration Service 6. Pyrocoustic Sealant
Penetration Specification	**Classification**
*500mm perforated cable tray	EI 60
*Electrical cables up to 21mm ø	
*1 off 'C1' Cable	
*1 off 'C2' Cable	
*1 off 'C3' Cable	

*All cables coated with 2mm DFT PST Coating 300mm along the cables upper side of the seal
Pyropro HPE 20mm annulus full 50mm depth of the Stopseal Coated Batt

Appendix UL-EU CERTIFICATE

Max Aperture 1000mm Wide x 1300mm Long

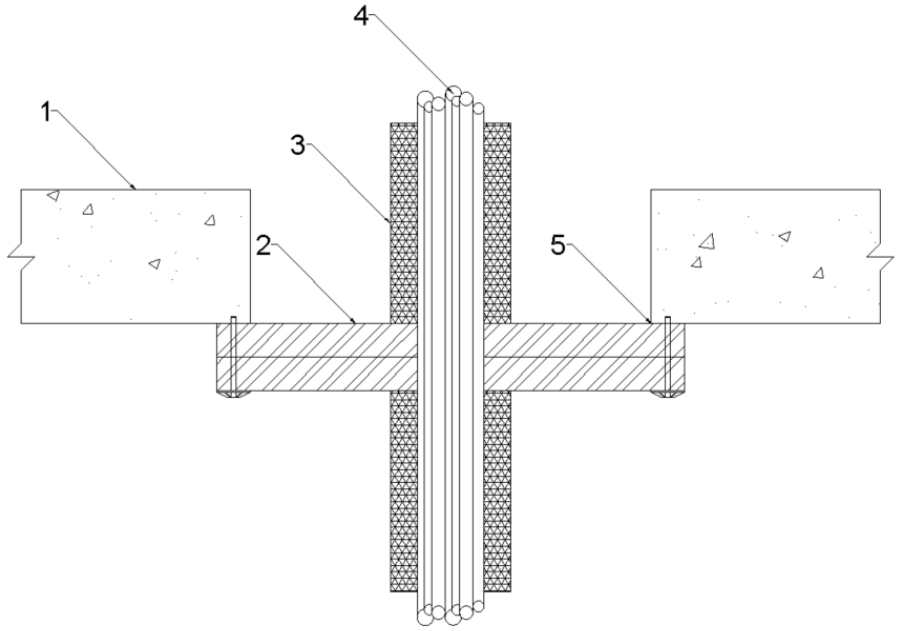

Key
1. Supporting construction
2. Stopseal Batt
3. Insulation
4. Penetration Service
5. Pyrocoustic Sealant

Service(s)	Classification
[1]Electrical cables upto 80mm dia	EI 60
[1]Cable Trays and Ladders	
[1]100 mm diameter bundle telecommunication cable type "F"	
[1]Unsheathed electrical cables up to 17mm dia	
[1]Unsheathed electrical cables 18-24mm dia	
[1]Steel or Copper Conduits up to 16mm	
[1]Plastic conduits up to 16mm	

[1]Cables and cable trays wrapped with a single layer of 40mm thick stonewool, min 40kg/m^3 (L/I 300mm)

Appendix UL-EU CERTIFICATE

Double Layer, Stopseal Fire Batt 50mm, Pattress Installed Insulated Metallic Pipes

Max Aperture 1000mm Wide x 1300mm Long	
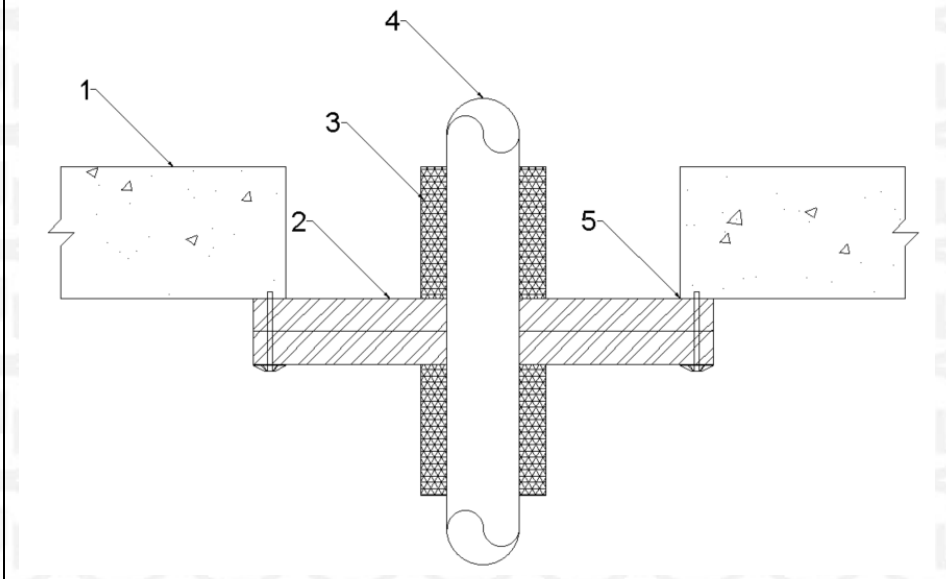	Key 1. Supporting construction 2. Stopseal Batt 3. Insulation 4. Penetration Service 5. Pyrocoustic Sealant
Service(s)	**Classification**
Steel or Copper Pipe 42mm Ø, 1.2mm – 14.2mm wall thickness. (L/I 300mm) 40mm stone wool insulation (min 40Kg/m^3)	EI 60 C/U
Steel or Copper Pipe 42mm – 159mm Ø, 2mm – 14.2mm wall thickness. (L/I 300mm) 40mm stone wool insulation (min 40Kg/m^3)	E 60 C/U EI 30 C/U

Appendix UL-EU CERTIFICATE

Double Layer, Stopseal Fire Batt 50mm, Pattress Installed Plastic Pipes

Max Aperture 1000mm Wide x 1300mm Long

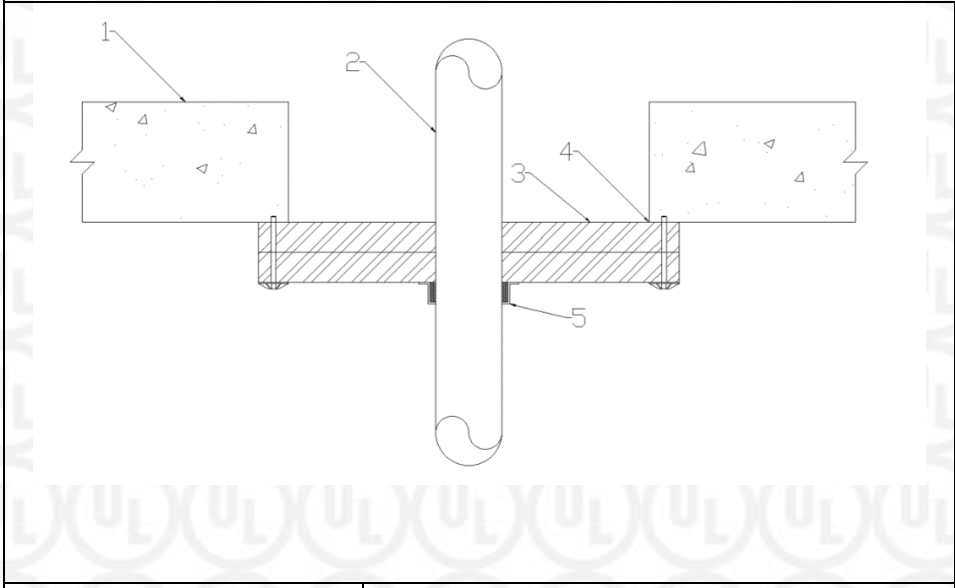

Key
1. Supporting construction
2. Stopseal Batt
3. Insulation
4. Penetration Service
5. PipeBloc PCP

Penetration Specification	Pipe Bloc PCP Collars	Classification
Pipe Diameters as below. Zero Distance	Fixed to the underside of the Stopseal Coated Batt utilising steel pig tail fixings	EI 60 U/C

Penetration Specification	Collar Reference	Intumescent Material
PVC Pipe 32mm Ø 1.8mm wall thickness	32mm PipeBloc PCP	30mm (W) x 4mm (T)
PVC Pipe 40mm Ø 1.8mm wall thickness	40mm PipeBloc PCP	
PVC Pipe 50mm Ø 1.8mm wall thickness	50mm PipeBloc PCP	
PVC Pipe 55mm Ø 2.3-2.8mm wall thickness	55mm PipeBloc PCP	30mm (W) x 6mm (T)
PVC Pipe 63mm Ø 2.3-2.8mm wall thickness	63mm PipeBloc PCP	
PVC Pipe 75mm Ø 3.1-4.4mm wall thickness	75mm PipeBloc PCP	30mm (W) x 8mm (T)
PVC Pipe 82mm Ø 3.1-4.4mm wall thickness	82mm PipeBloc PCP	
PVC Pipe 90mm Ø 4.2-6.6mm wall thickness	90mm PipeBloc PCP	30mm (W) x 10mm (T)
PVC Pipe 100mm Ø 4.2-6.6mm wall thickness	100mm PipeBloc PCP	
PVC Pipe 110mm Ø 4.2-6.6mm wall thickness	110mm PipeBloc PCP	
PVC Pipe 125mm Ø 6.0mm wall thickness	125mm PipeBloc PCP	40mm (W) x 12mm (T)
PVC Pipe 140mm Ø 6.1-7.5mm wall thickness	140mm PipeBloc PCP	
PVC Pipe 160mm Ø 6.2-9.5mm wall thickness	160mm PipeBloc PCP	

Appendix UL-EU CERTIFICATE

Penetration Specification	Collar Reference	Intumescent Material
PP Pipe 32mm Ø 2.9mm wall thickness	32mm PipeBloc PCP	30mm (W) x 4mm (T)
PP Pipe 40mm Ø 2.9mm wall thickness	40mm PipeBloc PCP	
PP Pipe 50mm Ø 2.9mm wall thickness	50mm PipeBloc PCP	
PP Pipe 55mm Ø 2.9-4.4mm wall thickness	55mm PipeBloc PCP	30mm (W) x 6mm (T)
PP Pipe 63mm Ø 2.9-4.4mm wall thickness	63mm PipeBloc PCP	
PP Pipe 75mm Ø 2.8-6.7mm wall thickness	75mm PipeBloc PCP	30mm (W) x 8mm (T)
PP Pipe 82mm Ø 2.8-6.7mm wall thickness	82mm PipeBloc PCP	
PP Pipe 90mm Ø 2.7-10.0mm wall thickness	90mm PipeBloc PCP	30mm (W) x 10mm (T)
PP Pipe 100mm Ø 2.7-10.0mm wall thickness	100mm PipeBloc PCP	
PP Pipe 110mm Ø 2.7-10.0mm wall thickness	110mm PipeBloc PCP	
PP Pipe 125mm Ø 3.1mm wall thickness	125mm PipeBloc PCP	40mm (W) x 12mm (T)
PP Pipe 140mm Ø 3.5-8.0mm wall thickness	140mm PipeBloc PCP	
PP Pipe 160mm Ø 4.0-14.6mm wall thickness	160mm PipeBloc PCP	

Penetration Specification	Collar Reference	Intumescent Material
PE Pipe 32mm Ø 2.9mm wall thickness	32mm PipeBloc PCP	30mm (W) x 4mm (T)
PE Pipe 40mm Ø 2.9mm wall thickness	40mm PipeBloc PCP	
PE Pipe 50mm Ø 2.9mm wall thickness	50mm PipeBloc PCP	
PE Pipe 55mm Ø 2.9-4.4mm wall thickness	55mm PipeBloc PCP	30mm (W) x 6mm (T)
PE Pipe 63mm Ø 2.9-4.4mm wall thickness	63mm PipeBloc PCP	
PE Pipe 75mm Ø 2.8-6.7mm wall thickness	75mm PipeBloc PCP	30mm (W) x 8mm (T)
PE Pipe 82mm Ø 2.8-6.7mm wall thickness	82mm PipeBloc PCP	
PE Pipe 90mm Ø 2.7-10.0mm wall thickness	90mm PipeBloc PCP	30mm (W) x 10mm (T)
PE Pipe 100mm Ø 2.7-10.0mm wall thickness	100mm PipeBloc PCP	
PE Pipe 110mm Ø 2.7-10.0mm wall thickness	110mm PipeBloc PCP	
PE Pipe 125mm Ø 3.1mm wall thickness	125mm PipeBloc PCP	40mm (W) x 12mm (T)
PE Pipe 140mm Ø 3.9-5.8mm wall thickness	140mm PipeBloc PCP	
PE Pipe 160mm Ø 4.9-9.5mm wall thickness	160mm PipeBloc PCP	

Appendix UL-EU CERTIFICATE

Double Layer, Stopseal Fire Batt 50mm, Plastic Pipes

Max Aperture 1000mm Wide x 1300mm Long		
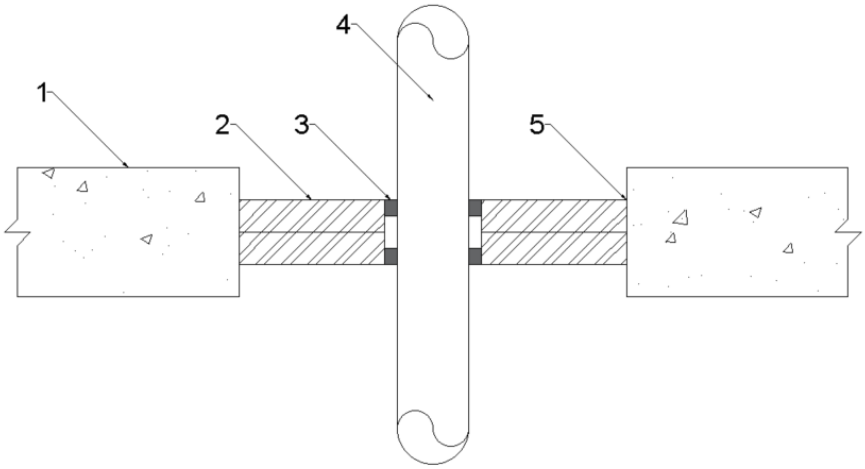		Key 1. Supporting construction 2. Stopseal Batt 3. Pyropro HPE 4. Penetration Service 5. Pyrocoustic Sealant
Penetration Specification	**Pyropro HPE**	**Classification**
Pipe Diameters as below	20mm annulus, 25mm deep both faces of the Stopseal Coated Batt	**See graphs below**

Appendix UL-EU CERTIFICATE

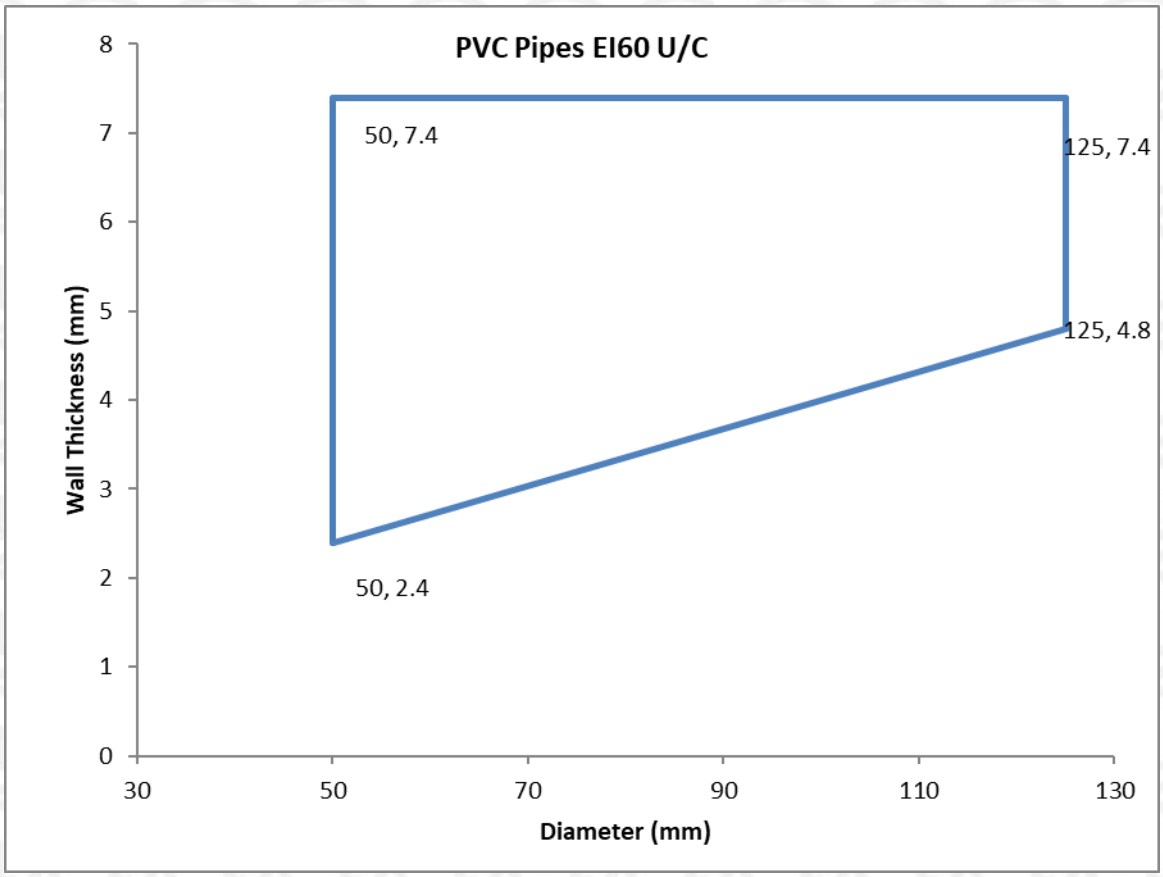

Appendix UL-EU CERTIFICATE

Max Aperture 1000mm Wide x 1300mm Long	
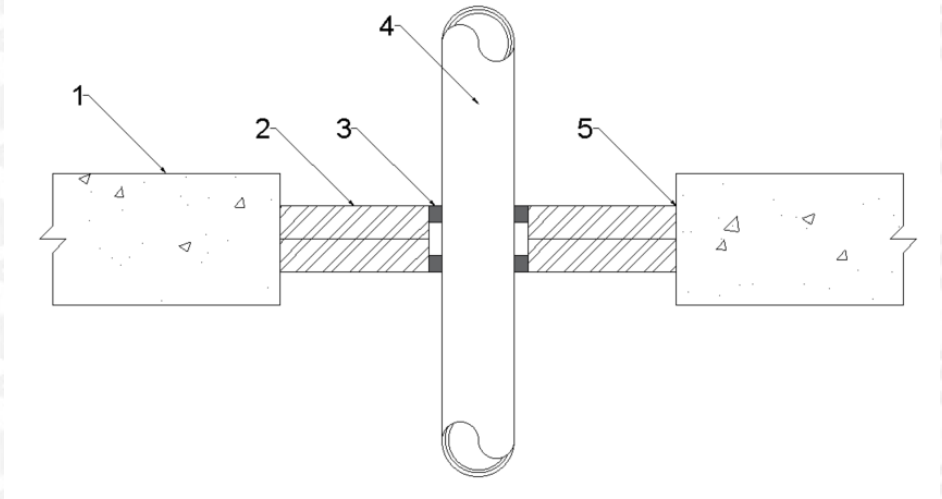	Key 1. Supporting construction 2. Stopseal Batt 3. Pyropro HPE 4. Penetration Service 5. Pyrocoustic Sealant
Penetration Specification	**Classification**
Uponor MLC (Multi-Layer Composite) Pipe 40mm ø 4mm wall thickness	EI 60 U/C
Uponor MLC (Multi-Layer Composite) Pipe 50mm ø 4.5mm wall thickness	
Uponor MLC (Multi-Layer Composite) Pipe 63mm ø 6mm wall thickness	
Uponor MLC (Multi-Layer Composite) Pipe 75mm ø 7.5mm wall thickness	
Uponor MLC (Multi-Layer Composite) Pipe 90mm ø 8.5mm wall thickness	
Uponor MLC (Multi-Layer Composite) Pipe 110mm ø 10mm wall thickness	

Pyropro HPE 20mm annulus full 50mm depth of the Stopseal Coated Batt

Appendix UL-EU CERTIFICATE

Max Aperture 1000mm Wide x 1300mm Long

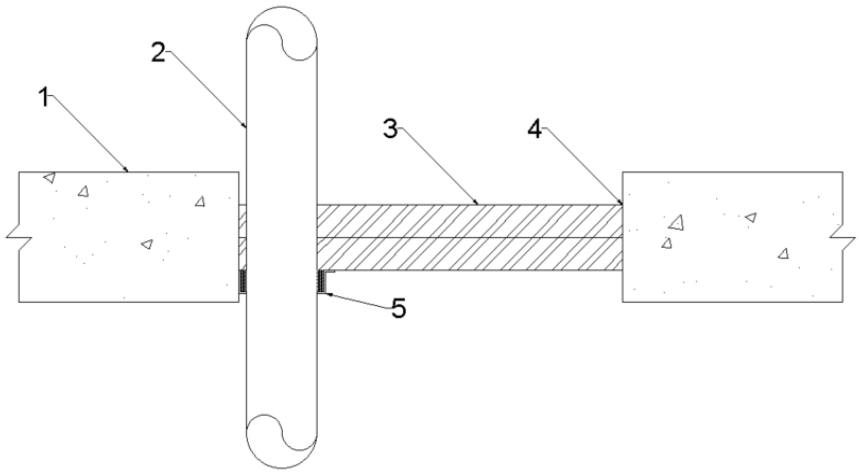

Key
1. Supporting construction
2. Penetration Service
3. Stopseal Batt
4. Pyrocoustic Sealant
5. PipeBloc PCP

Penetration Specification	Pipe Bloc PCP Collars	Classification
Pipe Diameters as below. Zero Distance	Fixed to the underside of the Stopseal Coated Batt utilising steel pig tail fixings	EI 60 U/C

Penetration Specification	Collar Reference	Intumescent Material
PVC Pipe 32mm Ø 1.8mm wall thickness	32mm PipeBloc PCP	30mm (W) x 4mm (T)
PVC Pipe 40mm Ø 1.8mm wall thickness	40mm PipeBloc PCP	
PVC Pipe 50mm Ø 1.8mm wall thickness	50mm PipeBloc PCP	
PVC Pipe 55mm Ø 2.3-2.8mm wall thickness	55mm PipeBloc PCP	30mm (W) x 6mm (T)
PVC Pipe 63mm Ø 2.3-2.8mm wall thickness	63mm PipeBloc PCP	
PVC Pipe 75mm Ø 3.1-4.4mm wall thickness	75mm PipeBloc PCP	30mm (W) x 8mm (T)
PVC Pipe 82mm Ø 3.1-4.4mm wall thickness	82mm PipeBloc PCP	
PVC Pipe 90mm Ø 4.2-6.6mm wall thickness	90mm PipeBloc PCP	30mm (W) x 10mm (T)
PVC Pipe 100mm Ø 4.2-6.6mm wall thickness	100mm PipeBloc PCP	
PVC Pipe 110mm Ø 4.2-6.6mm wall thickness	110mm PipeBloc PCP	
PVC Pipe 125mm Ø 6.0mm wall thickness	125mm PipeBloc PCP	40mm (W) x 12mm (T)
PVC Pipe 140mm Ø 6.1-7.5mm wall thickness	140mm PipeBloc PCP	
PVC Pipe 160mm Ø 6.2-9.5mm wall thickness	160mm PipeBloc PCP	

Appendix UL-EU CERTIFICATE

Penetration Specification	Collar Reference	Intumescent Material
PP Pipe 32mm Ø 2.9mm wall thickness	32mm PipeBloc PCP	30mm (W) x 4mm (T)
PP Pipe 40mm Ø 2.9mm wall thickness	40mm PipeBloc PCP	
PP Pipe 50mm Ø 2.9mm wall thickness	50mm PipeBloc PCP	
PP Pipe 55mm Ø 2.9-4.4mm wall thickness	55mm PipeBloc PCP	30mm (W) x 6mm (T)
PP Pipe 63mm Ø 2.9-4.4mm wall thickness	63mm PipeBloc PCP	
PP Pipe 75mm Ø 2.8-6.7mm wall thickness	75mm PipeBloc PCP	30mm (W) x 8mm (T)
PP Pipe 82mm Ø 2.8-6.7mm wall thickness	82mm PipeBloc PCP	
PP Pipe 90mm Ø 2.7-10.0mm wall thickness	90mm PipeBloc PCP	30mm (W) x 10mm (T)
PP Pipe 100mm Ø 2.7-10.0mm wall thickness	100mm PipeBloc PCP	
PP Pipe 110mm Ø 2.7-10.0mm wall thickness	110mm PipeBloc PCP	
PP Pipe 125mm Ø 3.1mm wall thickness	125mm PipeBloc PCP	40mm (W) x 12mm (T)
PP Pipe 140mm Ø 3.5-8.0mm wall thickness	140mm PipeBloc PCP	
PP Pipe 160mm Ø 4.0-14.6mm wall thickness	160mm PipeBloc PCP	

Penetration Specification	Collar Reference	Intumescent Material
PE Pipe 32mm Ø 2.9mm wall thickness	32mm PipeBloc PCP	30mm (W) x 4mm (T)
PE Pipe 40mm Ø 2.9mm wall thickness	40mm PipeBloc PCP	
PE Pipe 50mm Ø 2.9mm wall thickness	50mm PipeBloc PCP	
PE Pipe 55mm Ø 2.9-4.4mm wall thickness	55mm PipeBloc PCP	30mm (W) x 6mm (T)
PE Pipe 63mm Ø 2.9-4.4mm wall thickness	63mm PipeBloc PCP	
PE Pipe 75mm Ø 2.8-6.7mm wall thickness	75mm PipeBloc PCP	30mm (W) x 8mm (T)
PE Pipe 82mm Ø 2.8-6.7mm wall thickness	82mm PipeBloc PCP	
PE Pipe 90mm Ø 2.7-10.0mm wall thickness	90mm PipeBloc PCP	30mm (W) x 10mm (T)
PE Pipe 100mm Ø 2.7-10.0mm wall thickness	100mm PipeBloc PCP	
PE Pipe 110mm Ø 2.7-10.0mm wall thickness	110mm PipeBloc PCP	
PE Pipe 125mm Ø 3.1mm wall thickness	125mm PipeBloc PCP	40mm (W) x 12mm (T)
PE Pipe 140mm Ø 3.9-5.8mm wall thickness	140mm PipeBloc PCP	
PE Pipe 160mm Ø 4.9-9.5mm wall thickness	160mm PipeBloc PCP	

Appendix UL-EU CERTIFICATE

Substrate	Minimum Substrate Thickness (mm)	Maximum Seal width (mm)	Minimum Seal Depth (mm)	Duct A / Duct B	Duct Specification (Duct must be classified in accordance with EN 13501-3/4 for the required period)	Fire Resistance (mins.)	
						E	S
Drywall/ Concrete/ Masonry wall	100	100	200*	A	EN 13501-3 - Uninsulated 1.0mm GMS steel, rectangular duct, maximum dimensions 1250 mm wide by 1000 mm high.	60	120
				B		120	-
Concrete floor	150	250	275**	A		120	120
				B		120	-
Drywall/ Concrete/ Masonry wall	100	100	400***	A		60	120
Drywall/ Concrete/ Masonry wall	100	100	200*	B	EN 13501-3 - Uninsulated 1.0mm GMS steel, rectangular duct, maximum dimensions 1250 mm wide by 1000 mm high. Duct insulated with Insulfrax 128 kg/m^3, 25 mm thick for a length of 400 mm through the penetration seal (100 mm extending from both faces of the seal)	120	-
Drywall/ Concrete/ Masonry wall	100	100	200*	C	EN 13501-4 - Uninsulated 1.0mm GMS steel, rectangular duct, maximum dimensions 1250 mm wide by 1000 mm high. Duct insulated with Insulfrax 128 kg/m^3, 25 mm thick for a length of 400 mm through the penetration seal (100 mm extending from both faces of the seal)	120	120

* 4 layers, outer layers overlapped
** 50 mm Stopseal Batt/100 mm Silverseal HS Compound/125 mm Stopseal Batt
*** 2 layers + 1 layer, 150 mm long fixed (with 75 and 100 mm pigtail screws and bedded on Pyropro HPE sealant) around the duct to form a collar on both faces of the main seal.

Appendix UL-EU Certificate

Certification Mark	**UL-EU mark**
Certificate No.	UL-EU-00771-CPR
Page	157/157
Date of Issue	2015-04-19

The UL-EU Mark, as displayed below, shall appear on certified products only. Minimum size is not specified, as long as the Mark is legible. The following is suggested.

The minimum height of the registered trademark symbol ® shall be 1 mm. When the overall diameter of the UL-EU Mark is less than 9.5 mm, the trademark symbol may be omitted if it is not legible to the naked eye.

The UL-EU Mark may appear on a label, nameplate, or may be cast, stamped or molded into the product. When appearing on a label or nameplate, the Manufacturer's name or trademark along with a model number are also required on that same label or nameplate. If cast, stamped or molded, the Manufacturer's name or trademark and model number shall also appear elsewhere on the product.

All content shall be in accordance with the details provided on this UL-EU Certificate.

PROCUREMENT

The Production site may reproduce the Mark or obtain it from a UL authorized supplier. The list of UL authorized suppliers can be found on UL's online directory at www.ul.com.